MOEN®
COMMERCIAL

Specifications

ADA

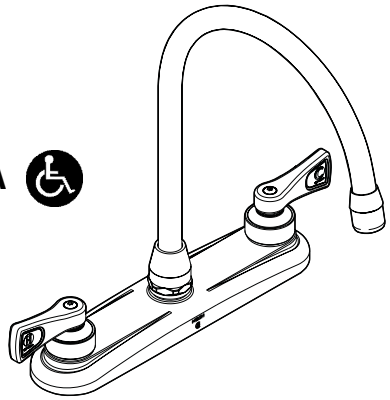

Two-Handle Kitchen Faucet

Model: 8287

NOTE: Designed to be installed through 2 or 3 holes - 1" min. dia. and on 8" on center

FAUCET DESCRIPTION
- Brass construction with chrome plated finish
- 1/2" IPS connections
- 8" centers
- Vandal resistant torx head screws

OPERATION
- Lever style handles with hot and cold color indicators

CARTRIDGE
- Brass shell, ceramic disc cartridge
- 1/4 turn operation

STANDARDS
- Third party certified to meet CSA B-125, ASME A112.18.1M, ANSI A117.1 and all applicable specifications referenced therein
- Certified to ANSI/NSF 61/9
- Complies with California Proposition 65 and with the Federal Safe Drinking Water Act

WARRANTY
- Warranted for five years against material or manufacturing defects

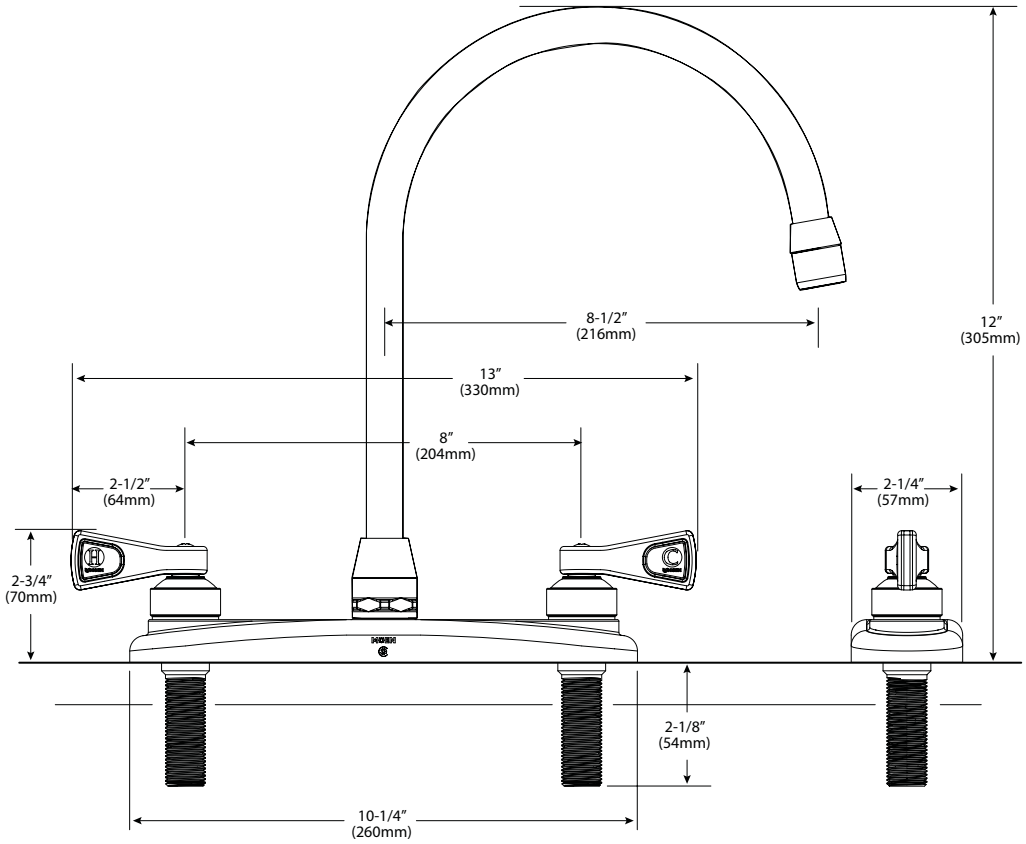

CRITICAL DIMENSIONS

(DO NOT SCALE)