SMITH® JAY R. SMITH MFG. CO.®
DIVISION OF SMITH INDUSTRIES, INC.
POST OFFICE BOX 3237
MONTGOMERY, ALABAMA 36109-0237 (USA)
TEL: 334-277-8520 FAX: 334-272-7396 www.jrsmith.com
CUSTOMER DRIVEN

MEMBER OF:

LOCATION

GUTTER DRAINS

FUNCTION: Used in gutters where a drain is required for connecting to the downspout leader. Flashing arrangement design permits removal of dome or flat strainer without disturbing flashing clamp and gutter liner.

FLAT STRAINER	LOW DOME	HIGH DOME
Does not obstruct traffic	Intercepts debris and allows adequate drainage in gutters and valleys	Used where an abnormal amount of debris is anticipated

BOTTOM OUTLET

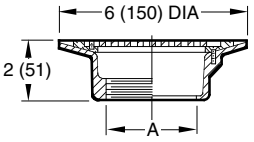

Fig. 1610T
Free Area: 7 SQ IN
(45) SQ CM

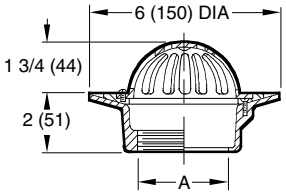

Fig. 1620T
Free Area: 8 SQ IN
(52) SQ CM

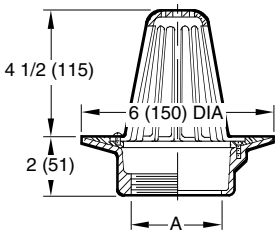

Fig. 1630T
Free Area: 24.5 SQ IN
(158) SQ CM

A SIZE OUTLET	02 (50) Thread	02 (50) Caulk	03 (75) Thread	04 (100) Thread
2"(51) Deep Body	✔	✔	✔	-
4"(100) Deep Body	✔	✔	✔	✔

REGULARLY FURNISHED:
2" (51) Deep Body
Threaded Outlet

45° OUTLET

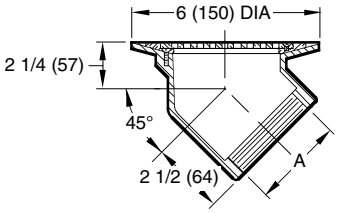

Fig. 1640T
Free Area: 7 SQ IN (45) SQ CM

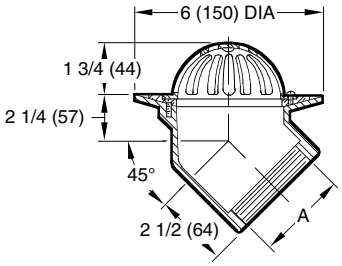

Fig. 1650T
Free Area: 8 SQ IN (52) SQ CM

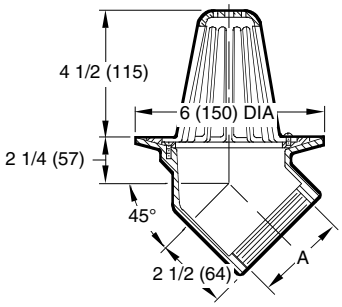

Fig. 1660T
Free Area: 24.5 SQ IN (158) SQ CM

Available In Threaded Outlet Only

A (Pipe Size) = 02(50), 03(75) or 04(100)

SIDE OUTLET

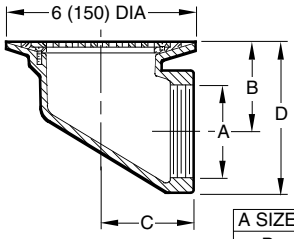

Fig. 1670T
Free Area: 7 SQ IN
(45) SQ CM

A SIZE	02 (50)	03 (75)	04 (100)
B	2 1/2 (64)	3 (76)	3 1/2(89)
C	2 1/2 (64)	3 (76)	4 (100)
D	4 (100)	5 (125)	6 1/4 (160)

Available in Threaded Outlet Only

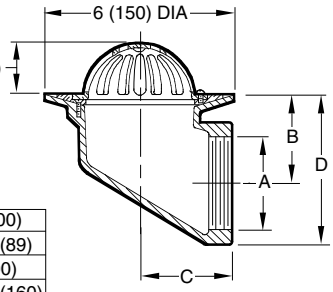

Fig. 1680T
Free Area: 8 SQ IN (52) SQ CM

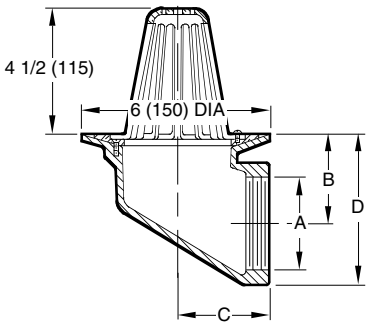

Fig. 1690T
Free Area: 24.5 SQ IN (158) SQ CM

REGULARLY FURNISHED:
Duco Cast Iron Body with Bronze Flashing Clamp and Bronze Top Secured with Brass Screws.

NOTE: Dimensions shown in parentheses are in millimeters.

VARIATIONS:
- 4" (100) Deep Body -B4 (Fig. 1610, 1620, 1630 only)
- Vandal Proof Screws -U
- Stainless Steel Mesh Over Dome -SSM

OPTIONAL MATERIALS:
- Galvanized Cast Iron Body -G
- Nickel Bronze Top -NB
- Polished Bronze Top -PB
- Bronze Body -BB

REV.	DATE	DESCRIPTION	BY	CKD. BY
G	6-16-10	Revised Variations	RN	TK
F	7-14-05	Revised Function	RN	CL
E	6-16-99	Revised Millimeters	CMD	BS
D	1-20-97	Rev Table & chg'd Opt Mat	EMB	BS

WEIGHT POUNDS

VOLUME CUBIC FEET

FIGURE NUMBER
1600 Series

FIGURE NUMBER 1600 Series | DRAWN BY: CR | CHECKED BY: TD | APPROVED BY: TD | DATE: 5-24-85 | SCALE: NONE | SIZE A | DRAWING NUMBER S1600 | G

DIMENSIONS ARE SUBJECT TO MANUFACTURERS TOLERANCE AND CHANGE WITHOUT NOTICE

WE CAN ASSUME NO RESPONSIBILITY FOR USE OF SUPERSEDED OR VOID DATA