JCM Fabricated Expansion Joints

JCM Expansion Joints permit up to 10” of concentrated pipe movement that provides for normal expansion/ contraction of pipelines subject to variations of both environmental and line content temperatures. JCM Expansion Joints are manufactured using a telescoping design that consists of a fabricated steel body, or housing, that accommodates an inserted internal “slip pipe” that moves in and out of the body. This free movement absorbs the linear, or axial, movement of the section of pipe. The fabricated steel body houses a “packing” area of alternating rings of lubricated flax and rubber that provides the water tight seal during the cycling of the joint. JCM Expansion Joints offer several design options including end connections, coatings, limit rods, stainless steel fabrication and others. JCM Expansion Joints are manufactured for each specific application allowing for the incorporation of special options or engineered features required for the installation.

Heavy Duty Construction - The heavy duty, durable exterior body provides the protective shell for the slip pipe and packing system. For corrosive or acidic environments, the expansion joint may be epoxy coated or fabricated of stainless steel.

Externally Guided Slip Pipe - The chromed slip pipe furnishes a hard, corrosion resistent surface that reduces friction between the slip pipe and packing material. For corrosive environments or line contents, slip pipe is available fabricated of stainless steel.

Adjustable Packing Gland - Alternating rings of lubricated flax and rubber are packed tightly into the packing area of the body by the adjustable packing gland. This packing gland maintains a consistent compression of the flax/rubber rings to ensure a tight, leak proof seal between the slip pipe and body.

Lubricated Packing - The rings of lubricated flax provide the “lubrication” to the slip pipe ensuring a smooth expanding/contracting movement while the square rubber rings secure the water tight seal. This packing area is easily accessible, without disruption of service, should repacking be required.

HOW TO ORDER

For pricing and engineering, the following information must be furnished:

Type of pipe
Outside diameter of pipe
Type of End Connections
Line Contents
Minimum and maximum temperatures
Maximum working pressure
Material and Coating specifications

JCM 802 Double End Expansion Joints are designed for special applications such as middle of line use where expansion joint body can be anchored. This fitting permits up to 10” total pipe movement, 5” on each end, with properly anchored body.

JCM Fabricated Expansion Joints

JCM Expansion Joints are available as Model 801 Single End design or Model 802 Double End Expansion Joint and are available with the following options:

(1) Weld-On Ends without Limit Rods
(2) Weld-On Ends with Limit Rods
(3) Flanged Ends without Limit Rods
(4) Flanged Ends with Limit Rods
(5) Mechanical Joint Ends without Limit Rods
(6) Mechanical Joint Ends with Limit Rods
Other end connections available
Increased or decreased amounts of pipe movement capability

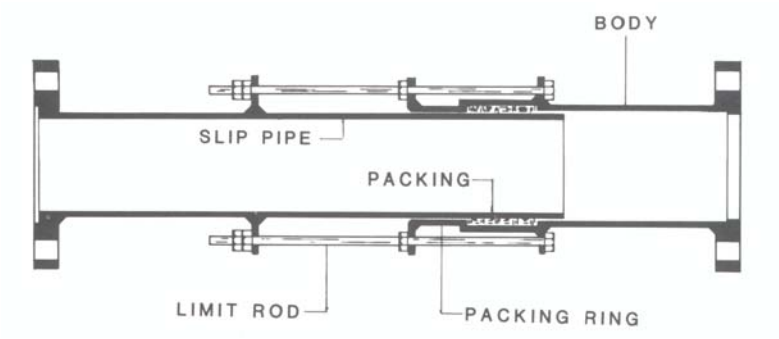

JCM 801 Single End Expansion Joint

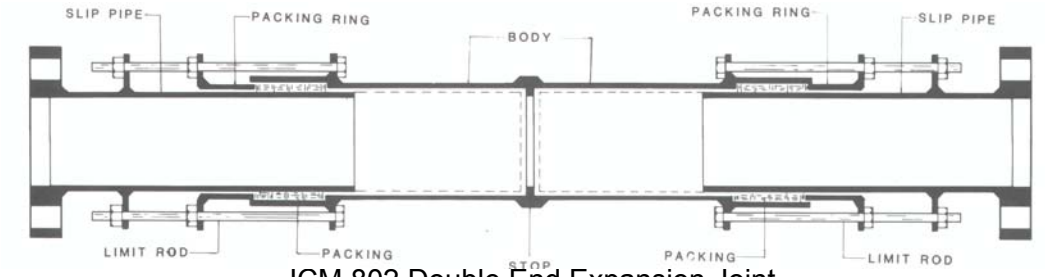

JCM 802 Double End Expansion Joint

JCM Expansion Joint - Typical Specifications

Expansion Joints shall be of the externally guided, slip joint type, permitting up to 10” of concentrated pipe movement. The packing gland shall have alternate rings of lubricated flax and rubber specially compounded for use with water, salt solutions, mild acids, bases, natural gas and sewage. The body of the expansion joint shall have a shop coat primer. The slip pipe shall be machined and be chrome plated. Expansion Joint shall be ANSI/NSF Standard 61 Certified. Expansion Joints shall be JCM 801 or approved equal.

JCM Expansion Joint - Material Specifications

BODY MATERIAL:	ASTM A-36 Carbon Steel
SLIP PIPE:	ASTM A53B Machined and chrome plated
GASKET AND FLAX:	Square packing Buna-N rubber, 55 - 60 durometer, compounded for use with water, salt solutions, mild acids, bases and sewage. Flax: Gurlock waxed, braided cord (hemp).
LIMIT RODS:	Grade B-5
FINISH:	Heavy coat of corrosion resistant primer.

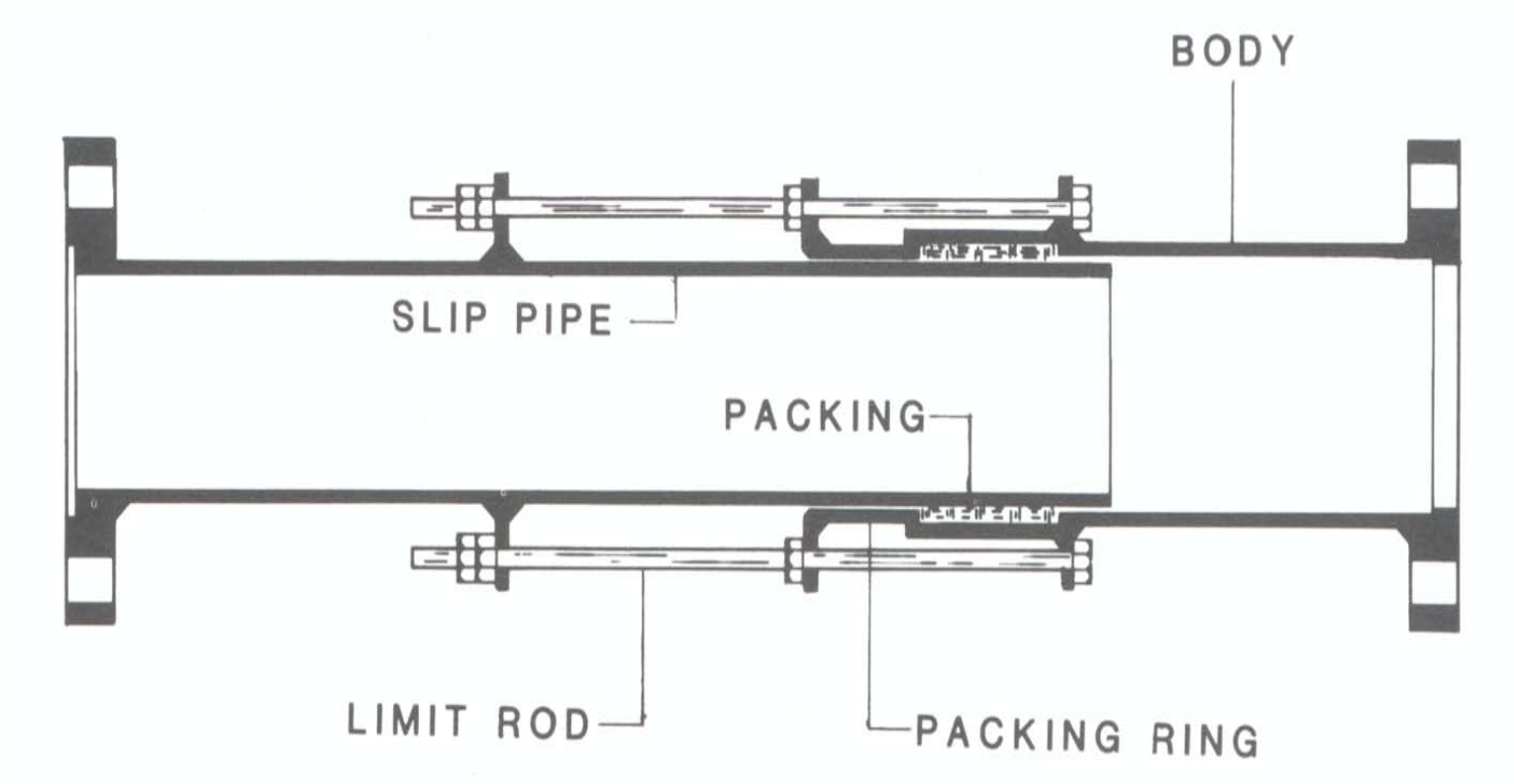

JCM Industries, Inc.
P. O. Box 1220
Nash, TX 75569-1220
Phone 800-527-8482 or 903-832-2581
Technical and Engineered Sales

JCM 801 Single End Expansion Joint

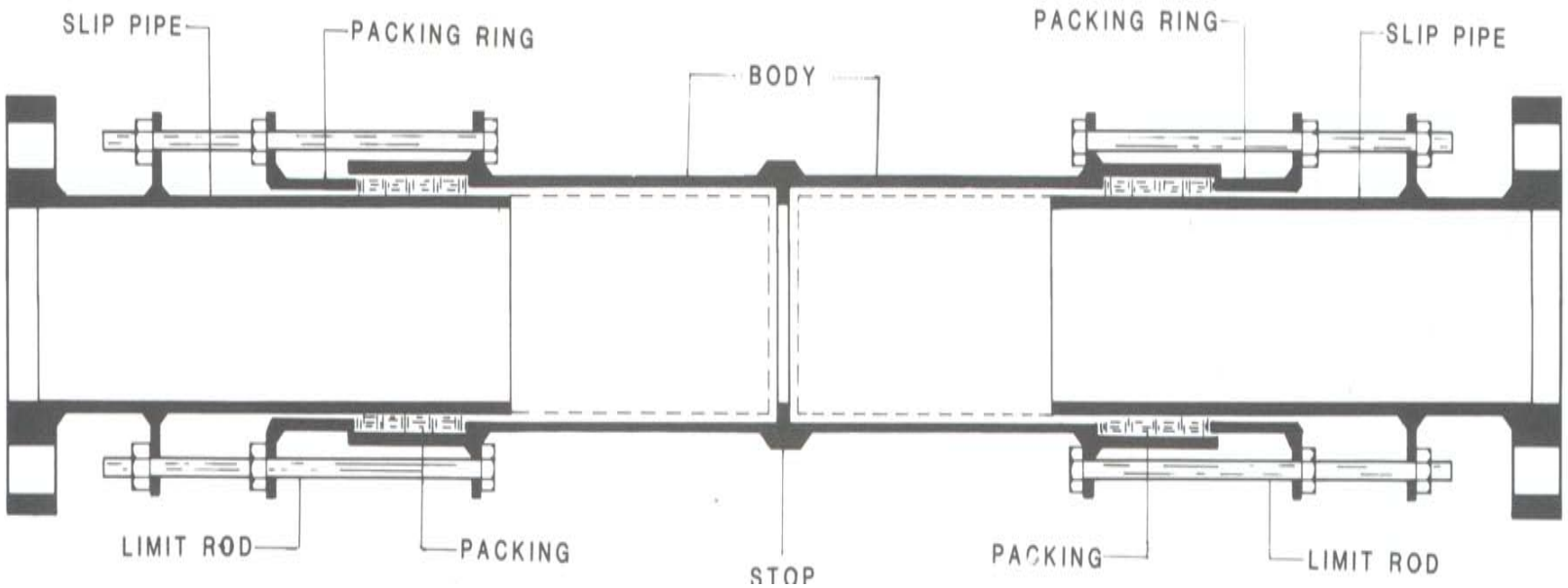

JCM Industries, Inc.
P. O. Box 1220
Nash, TX 75569-1220
Phone 800-527-8482 or 903-832-2581
Technical and Engineered Sales

JCM 802 Double End Expansion Joint

JCM 801 Expansion Joint
Typical Specifications

JCM 801 Expansion Joint

Expansion Joints shall be of the externally guided, slip joint type, permitting up to 10 inches of concentrated pipe movement. The packing gland shall have alternate rings of lubricated flax and rubber specially compounded for use with water, salt solutions, mild acids, bases, natural gas and sewage. The body of the expansion joint shall have a shop coat primer. The slip pipe shall be machined and be chrome plated. Expansion Joints shall be JCM 801 or approved equal.

JCM 800 Series Expansion Joints are ANSI/NSF Standard 61 Certified.

JCM 801 Expansion Joint
Material Specifications

JCM 801 Expansion Joint - Material Specifications

BODY MATERIAL: ASTM A-36 Carbon Steel

SLIP PIPE: ASTM A53B Machined and chrome plated

GASKET AND FLAX: 1/2" square packing Buna-N rubber, 55 - 60 durometer, compounded for use with water, salt solutions, mild acids, bases and sewage. Flax:Gur-lock 1/2" waxed, braided cord (hemp).

LIMIT RODS: Grade B-5

FINISH: Heavy coat of corrosion resistant primer.

JCM

JCM EXPANSION JOINTS
INSTALLATION INSTRUCTIONS

INSTALLATION RECOMMENDATIONS

Pipe alignment is important for proper functioning of the expansion joint, and to ensure free and concentric movement of the slip pipe through the stuffing box. Alignment guides should be provided to allow free pipe movement along the axis, and to prevent horizontal or vertical movement. The first alignment guide should be placed as close to the joint as is practical, up to maximum of 4 pipe diameters. The distance from the first guide to the second should not exceed 14 pipe diameters. If anchors are used, they too should be located within 4 pipe diameters of the expansion joint. Additional supports are usually required in accordance with standard practice.

Limit rods are required on long pipelines where two or more expansion joints are required and it is impractical to install intermediate anchors between joints. In other words, the limit rods control the amount of outward movement (pipeline contraction) that can take place in any one joint.

Note: All joints except the expansion joint must be restrained joints for the expansion joint to cycle properly.

INSTALLATION GUIDE

Place the slip pipe to the full entry position in the sleeve body. Withdraw the slip pipe to the calculated value determined by the following formula:

$$\frac{\text{Max. Temp. - Installation Temp.}}{\text{Total Temp. Range - (Max. - Min. Temp)}} \times 10^{*} = \text{Total Slip Pipe Withdrawal (Inches)}$$

*If joint is made for movement other than 10”, substitute the figure for which joint is designed.

EXAMPLE:

INSTALLATION TEMP. = 80°F
MAX. OPERATING TEMP. = 130°F
MIN. OPERATING TEMP. = 30°F

FORMULA CALCULATION:

$$\frac{130 - 80}{130 - 30} \times 10 = \frac{50}{100} \times 10 = 5\text{”}$$ Total Slip Pipe Withdrawal (Inches)

2 - 1/2” Withdrawal on each end of double expansion joint

When the slip pipe is in proper position, tighten the bolts on the packing ring, alternating in a star pattern. Tighten to approximately 20 ft. lbs. or until stuffing box packing is tight enough to prevent leakage.

INT801-0396