METDATA1 WEATHER STATION
WITH CM6/CM10 TRIPOD

REVISION: 4/98

COPYRIGHT (c) 1993-1998 CAMPBELL SCIENTIFIC, INC.

WARRANTY AND ASSISTANCE

The **METDATA1 AND THE CM6/CM10 TRIPOD** are warranted by CAMPBELL SCIENTIFIC, INC. to be free from defects in materials and workmanship under normal use and service for twelve (12) months from date of shipment unless specified otherwise. Batteries have no warranty. CAMPBELL SCIENTIFIC, INC.'s obligation under this warranty is limited to repairing or replacing (at CAMPBELL SCIENTIFIC, INC.'s option) defective products. The customer shall assume all costs of removing, reinstalling, and shipping defective products to CAMPBELL SCIENTIFIC, INC. CAMPBELL SCIENTIFIC, INC. will return such products by surface carrier prepaid. This warranty shall not apply to any CAMPBELL SCIENTIFIC, INC. products which have been subjected to modification, misuse, neglect, accidents of nature, or shipping damage. This warranty is in lieu of all other warranties, expressed or implied, including warranties of merchantability or fitness for a particular purpose. CAMPBELL SCIENTIFIC, INC. is not liable for special, indirect, incidental, or consequential damages.

Products may not be returned without prior authorization. To obtain a Returned Materials Authorization (RMA), contact CAMPBELL SCIENTIFIC, INC., phone (435) 753-2342. After an applications engineer determines the nature of the problem, an RMA number will be issued. Please write this number clearly on the outside of the shipping container. CAMPBELL SCIENTIFIC's shipping address is:

CAMPBELL SCIENTIFIC, INC.
RMA#_____
815 West 1800 North
Logan, Utah 84321-1784

CAMPBELL SCIENTIFIC, INC. does not accept collect calls.

Non-warranty products returned for repair should be accompanied by a purchase order to cover the repair.

CAMPBELL SCIENTIFIC, INC.

815 W. 1800 N.
Logan, UT 84321-1784
USA
Phone (435) 753-2342
FAX (435) 750-9540
www.campbellsci.com

Campbell Scientific Canada Corp.
11564 -149th Street
Edmonton, Alberta T5M 1W7
CANADA
Phone (403) 454-2505
FAX (403) 454-2655

Campbell Scientific Ltd.
Campbell Park
80 Hathern Road
Shepshed, Leics. LE12 9RP
ENGLAND
Phone (44)-50960-1141
FAX (44)-50960-1091

TABLE OF CONTENTS

PAGE

1. PREPARATION AND SITING 1-1

1.1 Installation Tasks 1-1
1.2 Tools Required 1-1
1.3 Siting and Exposure 1-3
1.4 Determining True North for Wind Vane Orientation 1-5

2. TOWER/TRIPOD INSTALLATION 2-1

2.1 Tower/Tripod Installation
2.2 Sensor Mounting Brackets

3. INSTRUMENTATION INSTALLATION 3-1

3.1 Enclosure, Datalogger, and Power Supply
3.2 Sensor Connection
3.3 Communication and Data Storage Peripherals
3.4 Sealing and Desiccating the Enclosure

4. SENSOR INSTALLATION 4-1

4.1 034A Met One Windset 4-1
4.2 014A Met One Wind Speed Sensor 4-1
4.3 024A Met One Wind Direction Sensor 4-2
4.4 05103 and 05305 RM Young Wind Monitors 4-2
4.5 03001 RM Young Wind Sentry Wind Set 4-3
4.6 03101 RM Young Wind Sentry Anemometer 4-3
4.7 LI200S Li-Cor Silicon Pyranometer/LI190SB Quantum Sensor 4-4
4.8 107/108 Temperature Probe 4-4
4.9 107B Soil Temperature Probe 4-5
4.10 CS500 Vaisala Temperature and RH Probe 4-5
4.11 HMP35C Vaisala Temperature and RH Probe 4-6
4.12 CS105 Vaisala Barometric Pressure Sensor 4-6
4.13 TE525 Texas Electronics Tipping Bucket Rain Gage 4-7
4.14 CS700-L Rain Gage 4-7
4.15 SR50 Sonic Ranging Sensor 4-8
4.16 CS615-L Water Content Reflectometer 4-8
4.17 237 Leaf Wetness Sensor 4-9
4.18 257 Soil Moisture Sensor 4-9
4.19 Wind Direction Sensor Orientation 4-10

5. SOFTWARE INSTALLATION 5-1

6. MAINTENANCE AND TROUBLESHOOTING 6-1

6.1 Maintenance 6-1
6.2 Troubleshooting 6-2

LIST OF TABLES

3.3-1 Station ID Numbers and Corresponding Switch Settings** 3-10
3.3-2 Station ID Numbers and Corresponding Switch Settings 3-12

LIST OF FIGURES

2.1-1 CM10 Weather Station 2-1
2.1-2 Extending the Tripod Legs 2-1
2.1-3 Tripod and Component Orientation 2-2
2.1-4 Ground Rod and Clamp 2-2
2.1-5 Tripod Ground Clamp 2-3
2.2-1 019ALU Crossarm and Lightning Rod 2-4
2.2-2 Gill Radiation Shield 2-4
2.2-3 015 Pyranometer Mounting Arm 2-4
2.2-4 025 Pyranometer Crossarm Stand 2-4
3.1-1 MetData1 Enclosure on CM6 or CM10 Tripod 3-2
3.1-2 MetData1 Enclosure on UT10 or UT30 Tower 3-2
3.1-3 PS12LA/CH12R Wiring and Switch Panel 3-3
3.1-4 BPALK 12 in MetData1 Enclosure 3-3
3.1-5 PS12LA in MetData1 Enclosure 3-3
3.1-6 MSX10 Solar Panel on CM6 or CM10 Tripod 3-4
3.1-7 MSX10 Solar Panel on UT10 or UT30 Tower 3-4
3.2-1 Illustration of MetData1
External bottom panel showing sensor, communication, power, and ground connections 3-5
3.2-2 MetData1 Jumper Configuration 3-5
3.3-1 SM192/SM716 Storage Module 3-6
3.3-2 Telephone Modem Installation 3-7
3.3-3 Phone Installation 3-7
3.3-4 SRM-5A and SC932 at Datalogger 3-8
3.3-5 SRM-5A Wiring 3-9
3.3-6 RF95 RF Modem and RF100/RF200 Transceiver 3-10
3.3-7 RF232 Base Station Installation 3-11
3.3-8 MD9 Multidrop Interface in MetData1 3-12
3.3-9 MD9 Multidrop Interface at the Computer and at the MetData1 3-13
3.4-1 Inside MetData1 Lid 3-13
4.1-1 Met One 034A Wind Speed and Direction Sensor 4-1
4.2-1 Met One 014A Wind Speed Sensor 4-1
4.3-1 Met One 024A Wind Direction Sensor 4-2
4.4-1 05103 RM Young Wind Monitor 4-2
4.5-1 03001 Mounted to the Mast 4-3
4.5-2 03001 Mounted to 019ALU Crossarm 4-3
4.6-1 03101 RM Young Wind Sentry Anemometer 4-3
4.7-1 LI200S/LI190SB and LI2003S Leveling Fixture 4-4
4.8-1 107 Temperature Probe 4-4
4.10-1 CS500 Temperature and RH Probe 4-5
4.11-1 HMP35C Vaisala Temperature and RH Probe 4-6
4.12-1 CS105 Vaisala Barometric Pressure Sensor in a Custom Weather Station Enclosure 4-6
4.12-2 CS105MD Vaisala Barometric Pressure Sensor in a MetData1 Enclosure 4-6
4.13-1 TE525 Texas Electronics Rain Gage 4-7
4.14-1 CS700-L Rain Gage and CM100 Mounting Bracket 4-7
4.15-1 SR50 Sonic Ranging Sensor 4-8
4.16-1 CS615 Water Content Reflectometer with CS615G Probe Insertion Guide 4-8
4.17-1 237 Leaf Wetness Sensor 4-9
4.18-1 257 Soil Moisture Sensor 4-9
4.19-1 Magnetic Declination for the Contiguous United States 4-10
4.19-2 Declination Angles East of True North Are Subtracted From 0 to Get True North 4-11
4.19-3 Declination Angles West of True North Are Added to 0 to Get True North 4-11

SECTION 1. PREPARATION AND SITING

These guidelines apply to several different Campbell Scientific weather stations.

1.1 INSTALLATION TASKS

1.1.1 INDOORS

- Immediately upon receipt of your shipment…
  - ⇒ Open shipping cartons.
  - ⇒ Check contents against invoice. Contact CSI immediately about any shortages.
- Several days prior to the planned installation date…
  - ⇒ Collect tools and site information (Section 1)
  - ⇒ Assemble datalogger, communications device, and power supply in enclosure (Section 3)
  - ⇒ Install datalogger support software on PC (Section 5)
  - ⇒ Establish communications between the datalogger and the PC (Section 5)
  - ⇒ Program datalogger, test sensors, and retrieve data (Section 5)
  - ⇒ Trial run the tower / tripod installation, assembling as much as possible (Section 2)
  - ⇒ Repackage equipment for transport to the field site

1.1.2 OUTDOORS

- Locate suitable site (Section 1)
- Prepare tower or tripod base (Section 2)
- Tripod and UT10 (3 meter tower) tower stations:
  - ⇒ Raise tripod or tower (Section 2)
  - ⇒ Install instrumentation enclosure (Section 3)
  - ⇒ Install sensors (Section 4)
- UT30 (10 meter tower) tower stations:
  - ⇒ Install 3 to 10 meter level sensors (Section 4)
  - ⇒ Raise tower (Section 2)
  - ⇒ Install instrumentation enclosure (Section 3)
  - ⇒ Install 0 to 3 meter level sensors (Section 4)
- ET101 / ET106 ET Stations:
  - ⇒ Place instrumentation enclosure low on the ET Tower (Section 3)
  - ⇒ Install sensor option (Section 4)
  - ⇒ Slide enclosure to top of tower and secure with correct orientation (Section 3)

1.2 TOOLS REQUIRED

Tools required to install and maintain a weather station are listed below.

1.2.1 TOOLS FOR TOWER INSTALLATION

All Towers
Shovel
Rake
Open end wrenches: 3/8", 7/16", ½", (2) 9/16"
Magnetic compass
6' Step ladder

CM6/CM10
Tape measure (12')
Level (12" to 24")
Small sledge hammer
Teflon tape or pipe dope
Allen hex wrench (5/64)

UT10
Tape measure (12' to 20')
Level (24" to 36")
Pick or digging bar
Claw Hammer
Materials for concrete form:
- Hand saw
- (4) 12" wood stakes
- (1) 2"x 4"x 8' piece of lumber
- (8) 8p double-head nails
- (8) 16p double-head nails
- Concrete trowels
- (2) 1 to 1.5" thick x 24" boards to support base above forms (optional)
- Concrete (0.4 cubic yards)

ET Tower
Tape measure (12’ to 20’)
Claw hammer
Level (24” to 36”)
Hand saw
Materials for concrete form:
- (4) 1" x 2" x 12" stakes
- (2) 2" x 4" x 96" lumber
- (12) 8p double-head nails
- (8) 16p double-head nails
- 20 ft form wire
- ½ Yard concrete
- Concrete trowel, edger
- Electrical Fish tape or 20 feet of small diameter rope
- Wheelbarrow

UT30
Tape measure (12' and 20')
Nut driver (3/8")
Level (36" to 48")
Small sledge hammer
Pliers
Tie wire
Climbing harness
Hard hat
Haul rope (50')
Non-stretch line (20')
Wire rope cutters
Materials for B18 Base and UTEYE Anchors:
- (4) Wood stakes 12"
- Pick or digging bar
- Concrete form materials (2"x 4" lumber, stakes, saw, hammer, nails, etc.)
- Concrete trowel and edger

Materials for UTDUK Duckbill Anchors
- Sledgehammer
- Highlift jack
- Chain (to attach jack to anchor loops)

Materials for RFM18 Base:
- (3) anchors appropriate for mounting surface
- (3) bolts and washers to secure base to anchors

1.2.2 TOOLS FOR INSTRUMENTATION AND MAINTENANCE

All Towers
Lock and key for enclosure
Magnetic declination angle (Section 4)
Magnetic compass
Straight bit screwdrivers (small, medium, large)
Phillips-head screwdrivers (small, medium)
Small diagonal side-cuts
Needle-nose pliers
Wire strippers
Pocket knife
Calculator
Volt / Ohm Meter
Electrical Tape
Step ladder (6')
Datalogger prompt sheet (Section 6)
Station manuals
Station log and pen
Open end wrenches: 3/8", 7/16", ½", (2) 9/16"
Socket wrench and 7/16" deep well socket
Adjustable wrench
Pliers
Conduit and associated tools (as required)
Felt-tipped marking pen
Claw hammer
Pipe wrench (12")

CM6/CM10
Tape measure (12')
Level (12" to 24")
Teflon tape or pipe dope

UT10
Tape measure (12' to 20')
3/8" nut driver
Level (24" to 36")
Teflon tape or pipe dope
(12) ¼" washers (for the 015 Crossarm stand only)
Allen wrench set

UT30
Tape measure (12' to 20')
3/8" nut driver
Level (36" to 48")
Pliers
Climbing harness
Hard hats
50' haul rope
Crescent wrench
Channel-lock pliers
¼" washers (spacers for U-bolts)
5/64" Allen hex wrench

1.2.3 SUPPLIES FOR POWER AND COMMUNICATIONS OPTIONS

AC Power
Wire, conduit, and junction boxes as needed

Phone Modem
Hayes compatible calling modem for PC
Phone line to weather station or junction box

Short-Haul Modem
4 Conductor communications cable from PC to weather station or junction box
6' copper ground rod and clamp for PC surge protection (optional)

1.3 SITING AND EXPOSURE

CAUTION: If any part of the weather station comes in contact with power lines, you could be killed. Contact local utilities for the location of buried utility lines before digging or driving ground rods.

Selecting an appropriate site for the weather station is critical in order to obtain accurate meteorological data. In general, the site should be representative of the general area of interest, and away from the influence of obstructions such as buildings and trees.

The weather station should not be located where sprinkler irrigation water will strike sensors or instrument enclosure.

Some general guidelines for site selection are listed below, which were condensed from EPA (1988)[1], WMO (1983)[2], and AASC (1985)[3] publications.

1.3.1 WIND SPEED AND DIRECTION

Wind sensors should be located over open level terrain, and at a distance of at least ten times (EPA) the height of any nearby building, tree or other obstruction, as illustrated in Figure 1.3-1.

Standard measurement heights:

3.0 m ± 0.1 m recommended (AASC)
2.0 m ± 0.1 m, 10.0 m ± 0.5 m optional (AASC)
10.0 m (WMO and EPA)

1.3.2 TEMPERATURE AND RELATIVE HUMIDITY

Sensors should be located over an open level area at least 9 m (EPA) in diameter. The surface should be covered by short grass, or where grass does not grow, the natural earth surface. Sensors should be located at a distance of at least four times the height of any nearby obstruction and at least 30 m (EPA) from large paved areas. Sensors should be protected from thermal radiation, and adequately ventilated.

Situations to avoid include:

- large industrial heat sources
- rooftops
- steep slopes
- sheltered hollows
- high vegetation
- shaded areas
- swamps
- areas where snow drifts occur
- low places holding standing water after rains

Standard measurement heights:

1.5 m ± 1.0 m (AASC)
1.25 - 2.0 m (WMO)
2.0 m temperature (EPA)
2.0 m and 10.0 m for temperature difference (EPA)

1.3.3 PRECIPITATION

A rain gage should be sited on level ground that is covered with short grass or gravel. In open areas, the distance to obstructions should be two to four times (EPA, AASC) the height of the obstruction.

The height of the opening should be as low as possible, but should be high enough to avoid splashing from the ground. Wind shields, such as those used by the National Weather Service, are recommended for open areas.

Collectors should be heated, if necessary, to properly measure frozen precipitation. The gage must be mounted above the average level of snow accumulation in areas that experience significant snowfall.

Standard measurement heights:

1.0 m ± 1.0 cm (AASC)
30.0 cm minimum (WMO, EPA)

1.3.4 SOLAR RADIATION

Pyranometers should be located to avoid shadows on the sensor at any time. Mounting it on the southern most (northern hemisphere) portion of the weather station will minimize the chance of shading from other weather station structures. Reflective surfaces and sources of artificial radiation should be avoided. The height at which the sensor is mounted is not critical.

1.3.5 SOIL TEMPERATURE

The measurement site for soil temperature should be at least 1 m^2 and typical of the surface of interest. The ground surface should be level with respect to the immediate area (10 m radius).

Standard measurement depths:

10.0 cm ± 1.0 cm (AASC)
5.0 cm, 10.0 cm, 50.0 cm, 100.0 cm (WMO)

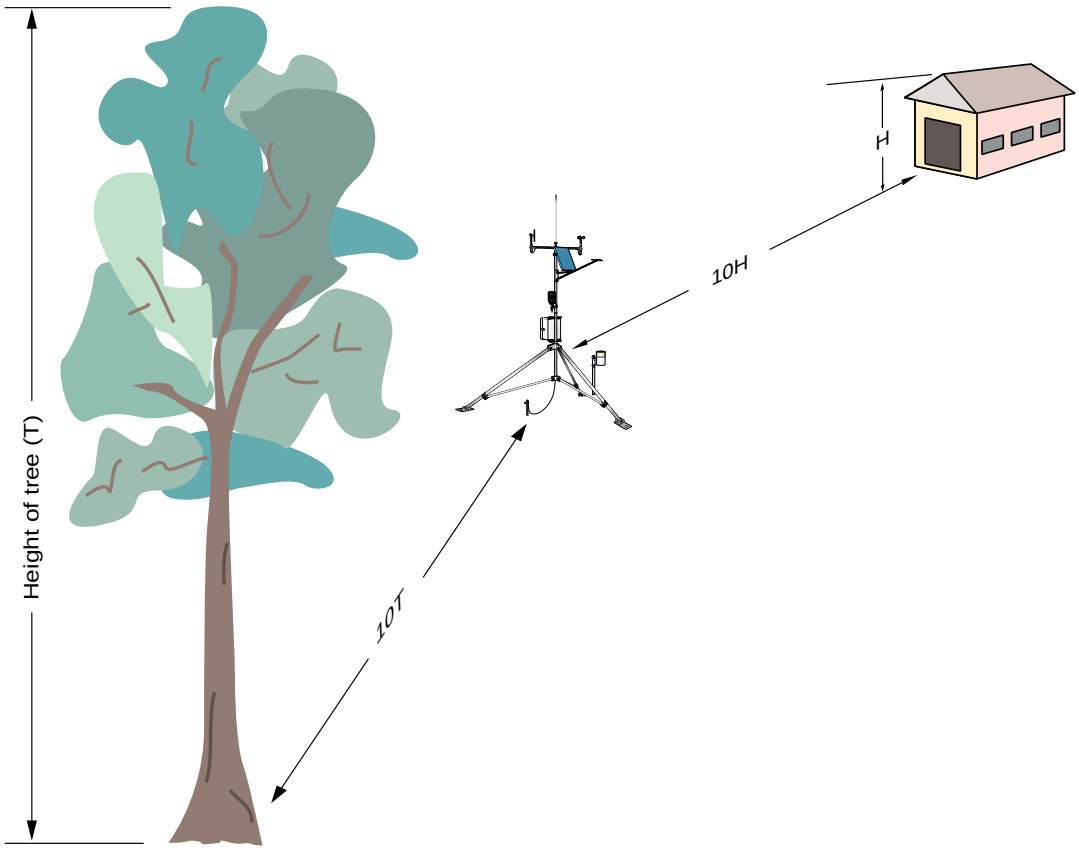

FIGURE 1.3-1. Effect of Structure on Wind Flow

1.4 DETERMINING TRUE NORTH FOR WIND VANE ORIENTATION

Magnetic declination, or other methods to find True North, should be determined prior to installing the weather station. True North is usually found by reading a magnetic compass and applying the correction for magnetic declination*; where magnetic declination is the number of degrees between True North and Magnetic North. Magnetic declination for a specific site can be obtained from a USFA map, local airport, or through an internet service called NSSDC CGM (Section 1.4.1). A general map showing magnetic declination for the contiguous United States is shown in Figure 1.4-1.

Declination angles east of True North are considered negative, and are subtracted from 0 degrees to get True North as shown Figure 1.4-2. Declination angles west of True North are considered positive, and are added to 0 degrees to get True North as shown in Figure 1.4-3. For example, the declination for Logan, Utah is 14.5° East. True North is 360° - 14.5°, or 345.5° as read on a compass.

* Other methods employ observations using the North Star or the sun, and are discussed in the Quality Assurance Handbook for Air Pollution Measurement Systems, Volume IV - Meteorological Measurements[4].

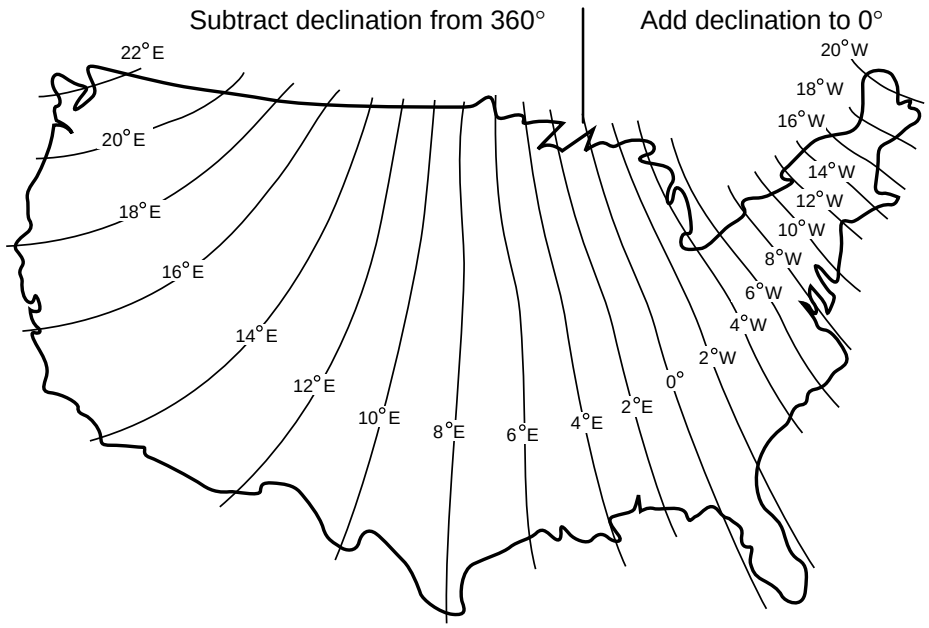

FIGURE 1.4-1. Magnetic Declination for the Contiguous United States

1.4.1 NSSDC CGM SERVICE

The NSSDC CGM (Corrected Geomagnetic) Service provides an easy way of determining magnetic declination of a specific site. Since magnetic declination fluctuates with time, it should be determined each time the wind vane orientation is adjusted. It can be accessed on the world wide web at

http://nssdc.gsfc.nasa.gov/space/cgm/cgm.html

If you know the latitude and longitude of your site, fill out Form 1as shown below for an accurate magnetic declination. If you do not know the latitude and longitude of your site, fill out Form 2 for estimate of magnetic declination. Note that longitude is expressed in 0 to 360 degrees east of the Greenwich prime meridian, and that north latitudes are positive.

Query Form 1: Latitude/Longitude

Latitude/Longitude below specified in:
Geographic
Year (from 1945 to 2000): 1998
Altitude above Earth's surface (km) [from 0. to 40000.]: 0
Latitude (degrees) [from -90.00 to 90.00]: 42.03
Longitude (degrees) [from 0.00 to 360.00]: 248.15

Query Form 2: Image Map

Year (from 1945 to 2000): 1998
Altitude above Earth's surface (km) [0. - 40000.]: 0
Click on map to specify location and submit: (select area on map provided)

A table containing similar information to the following will be returned after submitting Forms 1 or 2.

Geographic		Alt.	CGM		IGRF Magnetic Field			Dipole	
Lat.	Long.	(km)	Lat.	Long.	H(nT)	D(deg)	Z(nt)	Lat.	Long.
42.03	248.15	0.	49.80	311.06	20608.	**14.417**	50505.	49.68	312.14

Magnetic declination is bold in this example to show its location in the table. A positive declination is east, while a negative declination is west. The declination in this example is 14.417 degrees. As shown in Figure 1.4-1, the declination for Logan, UT is east, so True North for this site is 360 - 14.417, or 345.5 degrees.

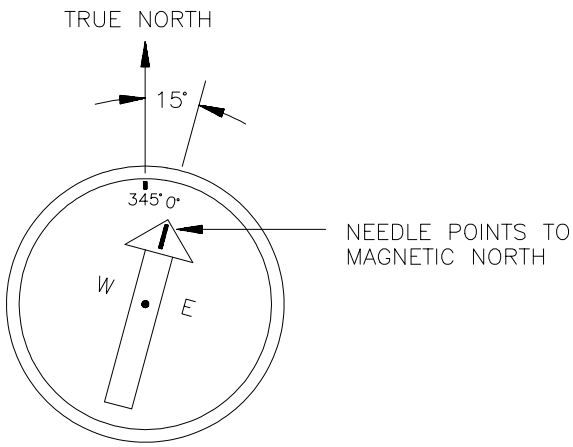

FIGURE 1.4-2. Declination Angles East of True North Are Subtracted From 0 to Get True North

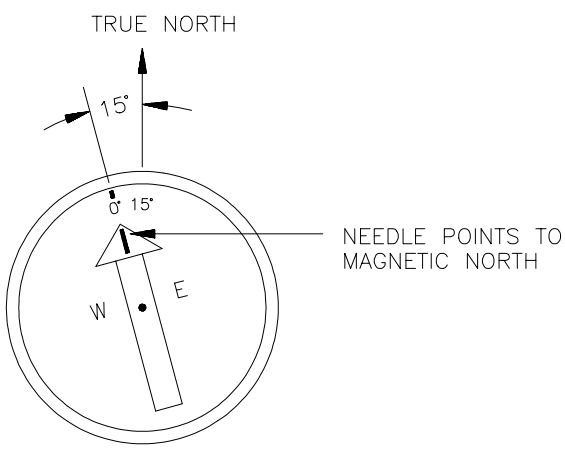

FIGURE 1.4-3. Declination Angles West of True North Are Added to 0 to Get True North

References

[1] EPA, (1987). On-Site Meteorological Program Guidance for Regulatory Modeling Applications, EPA-450/4-87-013. Office of Air Quality Planning and Standards, Research Triangle Park, North Carolina 27711.

[2] WMO, (1983). Guide to Meteorological Instruments and Methods of Observation. World Meteorological Organization No. 8, 5th edition, Geneva, Switzerland.

[3] The State Climatologist, (1985) Publication of the American Association of State Climatologists: Height and Exposure Standards for Sensors on Automated Weather Stations, v. 9, No. 4 October, 1985.

[4] EPA, (1989). Quality Assurance Handbook for Air Pollution Measurement Systems, EPA Office of Research and Development, Research Triangle Park, North Carolina 27711.

SECTION 2. CM6/CM10 TRIPOD INSTALLATION

The CM6 and CM10 tripods provide a support structure for mounting weather station components. Figure 2-1 shows a typical guyed CM10 tripod weather station equipped with instrumentation enclosure, meteorological sensors, and solar panel.

FIGURE 2-1. CM10 Weather Station

2.1 SPECIFICATIONS

CM6 Tripod

Maximum height
(zero leg extension) 7.5 feet
Minimum height
(full leg extension) 5.5 feet
Wind Load (Wind Sensors at 2 meters)*
Maximum wind load 100 mph
Gust survival 130 mph
Tripod Leg Diameter (See Table 1-5)
d = diameter
h = height at top of bell reducer
$d = 2\ (4.834 + (54.5^2 - (h - 42.4)^2\ )^{0.5})$

CM10 Tripod

Maximum height
(zero leg extension) 11 feet
Minimum height
(full leg extension) 7.2 feet
Wind Load (Wind Sensors at 3 meters)*
No Guy Wires
Maximum 70 mph
Gust survival 100 mph
With Guy Wires
Maximum 120 mph
Gust survival 150 mph
Tripod Leg Diameter (See Table 1-6)
d = diameter
h = height at top of bell reducer
$d = 2\ (4.834 + (78.75^2 - (h - 62.35)^2\ )^{0.5})$

*Wind Load data assumes 4.5 ft^2 of area placed at the top of the tripod mast

TABLE 2-1. CM6 Heights and Leg Diameters

Height mark is 1 1/4 inch above bell reducer

Height (In)	Diameter (In)
70	104 6/8
72	102 3/8
74	99 6/8
76	97
78	93 6/8

TABLE 2-2. CM10 Heights and Leg Diameters

Height (In)	Diameter (In)
109	138
111	135 1/8
113	131 7/8
115	128 1/2
117	125

2.2 TRIPOD PARTS

Tripods are either shipped complete and mostly assembled (CM6 or CM10), or as a kit that requires the user to supply some parts (CM10K).

If a preassembled CM6 or CM10 Tripod was ordered, the following parts should have been received:

(1) Tripod Base Assemble
(1) Mast Assembly
(1) Cross Arm Mount (Short Pipe)
(1) Lightning Rod with Clamp
(1) Grounding Rod with Clamp
(1) 5 ft 4 AWG Wire
(1) 4 ft 12 AWG Wire
(3) Hold Down Stakes
(12) Cable Ties

If the CM10K Tripod Kit was received, first assemble the tripod base assembly and mast assembly according to Section 1 in the CM10K Tripod Kit Manual.

The following items are also part of the CM10K Tripod Kit:

(1) Cross Arm Mount (Short Pipe)
(1) Lightning Rod with Clamp
(1) Grounding Rod with Clamp

The following items need to be procured to complete the CM10K Tripod Kit:

(1) 5 ft 4 AWG Wire
(1) 4 ft 12 AWG Wire
(3) Hold Down Stakes
(12) Cable Ties

2.3 TRIPOD INSTALLATION

CM6 and CM10 tripods are designed to allow installation in many types of terrain. The following installation instructions, however, assume an installation on flat and reasonably level ground.

1. Prepare the area where the tripod will be installed. In most installations, the tripod requires an area 9 feet (CM6) or 12 feet (CM10) in diameter. Natural vegetation and the ground surface should be disturbed as little as possible, but brush and tall weeds should be removed.

2. Lay the tripod base and mast assemblies on the ground. Apply pipe dope or Teflon tape to threads on the crossarm mount (short pipe) and the 1 1/4 inch end of the mast. To prevent cross-threading, hand thread the crossarm mount into the mast's bell reducer and then tighten with a pipe wrench. Hand thread the mast into the threaded coupling on the tripod center bracket and then tighten with a pipe wrench.

3. Using a tape measure and a felt-tipped pen, mark the tripod legs to indicate how far they should extend. From the end of the 3/4" pipe that attaches to the foot (Figure 2-2), measure up 23" on the CM10, or 26" on the CM6, and mark each leg with a felt tip pen.

4. Each leg has a slide collar with a single bolt for loosening or tightening the collar (Figure 2-2). Loosen the bolt on each collar with a 1/2" wrench.

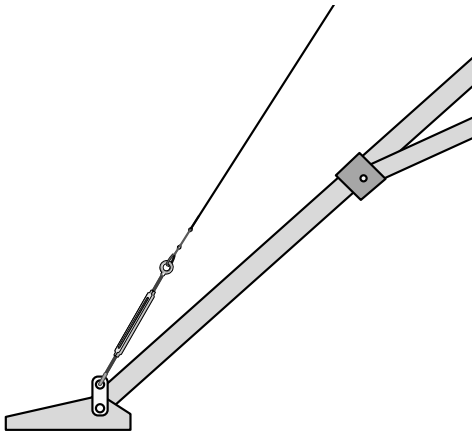

FIGURE 2-2. Extending the Tripod Legs

5. Stand the tripod upright and orient it so one leg points south (Figure 2-3). Extend the leg until the top of the slide collar is even with the mark from Step 3 and tighten the bolt. Extend the other legs in the same manner.

6. Plumb the mast by adjusting the south and northeast facing legs. Loosen the slide-collar bolt on the south facing leg. With the level on the south side of the mast, adjust the leg so the level reads plumb, then tighten the bolt. Repeat the same procedure for the northeast facing leg with the level on the east side of the mast.

> **NOTE:** Adjusting the legs can be made easier by spraying the slide collar and leg with a silicon spray, and tapping on the leg with a hammer.

7. Three rebar stakes are provided for securing the tripod to the ground. Drive the stakes through the holes in the feet. Some users prefer to drive 4 foot "T" posts next to each leg, and attach the legs to the posts with 2" u-bolts.

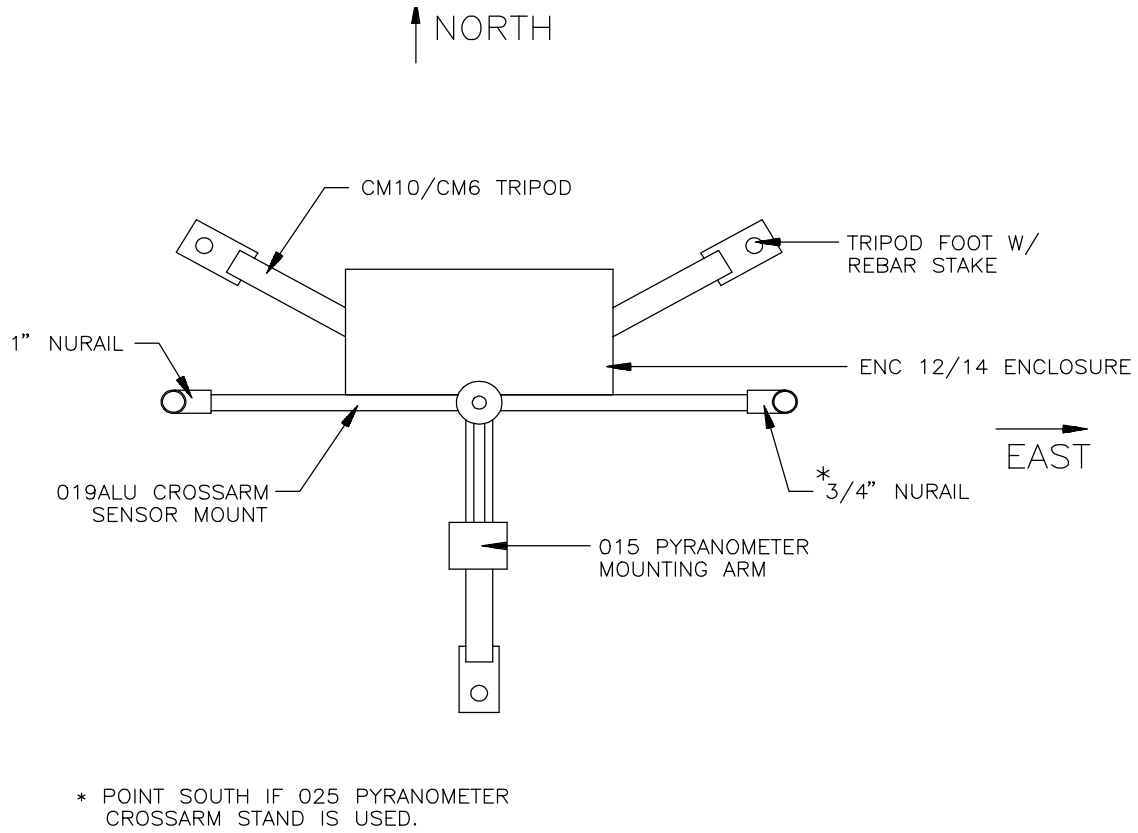

FIGURE 2-3. Tripod and Component Orientation

2.4 TRIPOD GROUNDING

Ground the tripod and shown in Figures 2-1, 2-4, and 2-5.

1. Drive the ground rod close to the center of the tripod using a fence post driver or sledge hammer. Slide the clamp down the rod before driving it in the ground. This will eliminate the frustration of trying to get the clamp to fit over a hammer damaged rod end. Drive the rod at an angle if an impenetrable hardpan layer exists. In hard clay soils, a gallon jug of water can be used to "prime" the soil and hole to make driving the rod easier.

2. Loosen the bolt that attaches the clamp to the ground rod. Strip 1 inch of insulation from one end of the 4 AWG wire and insert it between the rod and the clamp. Tighten the clamp bolt (Figure 2-4).

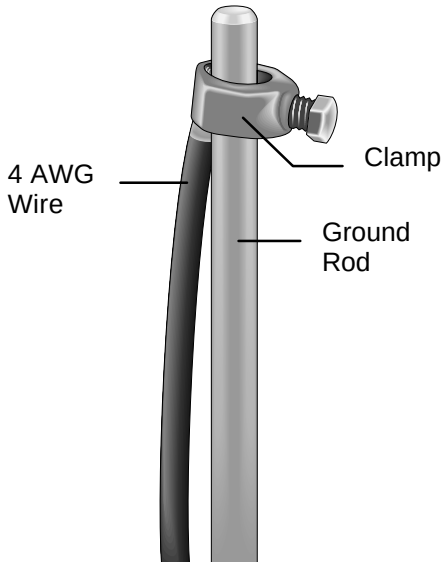

FIGURE 2-4. Ground Rod and Clamp

3. Loosen the set screws in the two brass ground lugs attached to the center bracket of the tripod (Figure 2-5). Strip 1 inch of insulation from the other end of the 4 AWG wire and insert it into the lower ground lug. Tighten the set screw. Strip 1 inch of insulation from one end of the 12 AWG wire and insert it into the upper ground lug. Tighten the set screw. The other end of the 12 AWG wire will attach to the ground lug of the instrumentation enclosure.

4. Attach the lightning rod to the mast as shown in Figure 2-1. If the weather station includes an 019ALU crossarm, attach it to the mast first, as described in Section 2.2-1 of the weather station installation manual. Loosen the two screws on the lightning rod mounting bracket. Position the mounting bracket 4 inches down from the top of the mast, then tighten both screws evenly. Make sure the lightning rod set screw is tight.

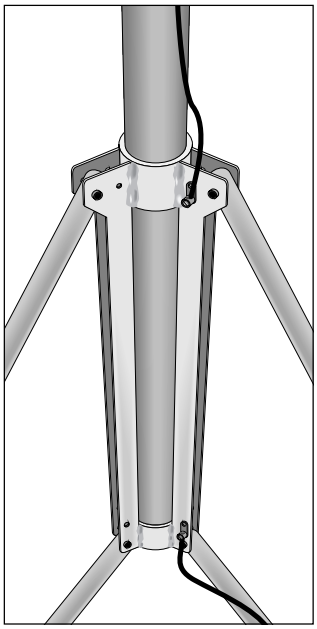

FIGURE 2-5. Tripod Ground Connections

2.5 CM10 GUY KIT INSTALLATION

The CM10 Guy Kit is an option when purchasing the CM10 Tripod or CM10K Tripod Kit. It can be installed to improve the CM10 Tripod wind load rating. Table 2-3 lists items in the CM10 Guy Kit.

TABLE 2-3. CM10 Guy Kit Parts

Item #	CSI Part #	Description	Quantity
G1	10845	Wire Rope	3
G2	10846	Turnbuckle	3
G3	10848	Top Plate	1
G4	10849	Bottom Plate	3
G5	6131	Thimble	6
G6	6132	U-Bolt	12

Install the guy kit as shown in Figure 2-6.

FIGURE 2-6. Guy Wire Installation

1. Construct an assembly consisting of the top plate, wire ropes, 3 thimbles, and 6 u-bolts.

   a. Place a thimble into each of the three small holes of the top plate. Twist each thimble slightly, as shown in Figure 2-7, to accomplish this.

   b. Thread a piece of wire rope through each of the three small top plate holes. Double the wire rope back on itself about 8 inches. Clamp the doubled wire with two u-bolts per wire, forming a loop. Fit the wire loop into the thimble groove. Adjust the u-bolts as needed. Once the thimble and wire loop are fitted together, tighten the u-bolts to secure the clamps.

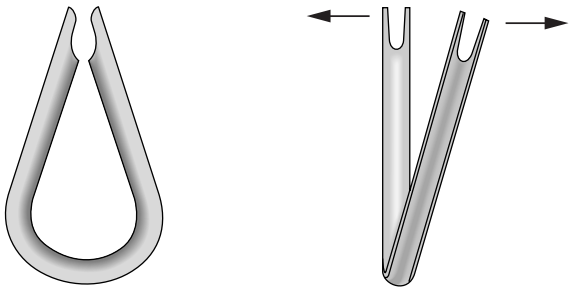

FIGURE 2-7. Thimble Twisting

2. Slide the top plate down the crossarm mount so that it rests on the bell reducer.

3. Attach the 3 bottom plates to the tripod feet with the existing tripod foot bolts. Make certain that each bottom plate is oriented such that the second hole is above the tripod foot.

4. Extend each turnbuckle to its functional limit

5. Attach the loop-end of the turnbuckles to the free end of each wire rope as shown in Figure 2-8. Use the remaining thimbles and u-bolts as done in step 1. Only finger-tighten the u-bolts, however.

FIGURE 2-8. Turnbuckle Assembly

6. Place the hook-end of each turnbuckle into a bottom plate, in an orderly fashion, so that each wire rope spans to the top plate untangled and unobstructed.

7. Sequentially pull the free end of the wire ropes to tighten each turnbuckle loop. When each is as hand tight as possible, tighten the u-bolts to secure the clamps.

8. Tighten the turnbuckles sequentially, one turn per cycle. Only tighten the turnbuckles until the wire rope is taught. DO NOT OVER TIGHTEN! The turnbuckles and wire rope are strong enough to buckle the mast if over tightened.

9. Check plumbness of the mast and adjust the guy wire tightness as needed.

2.6 SENSOR MOUNTING BRACKETS

Mounting brackets provide a means of mounting the sensors to the tripod. Bracket mounting heights are referenced from the top of the bell reducer; orientation is shown in Figure 2-3.

2.6.1 019ALU CROSSARM SENSOR MOUNT

Attach the 019ALU to the mast as shown in Figure 2-9.

Slide the center NU-RAIL connector of the 019ALU down the crossarm mount (short pipe) until it rests on top of the bell reducer. In most applications, the center of the NU-RAIL connector should be about 113" above the ground surface. Orient the 019ALU in a East/West direction with the 3/4" NU-RAIL facing East (northern hemisphere) and tighten the set screws. If the 025 Crossarm Stand is used (Section 2.6.4), orient the 019ALU North-South with the 3/4" NU-RAIL facing South.

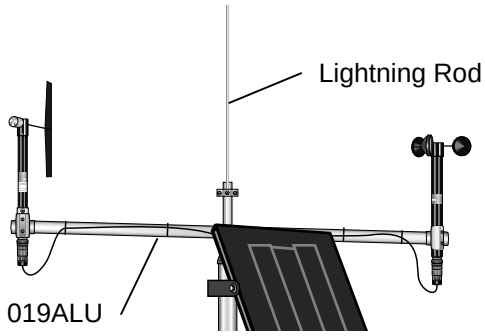

FIGURE 2-9. 019ALU Crossarm and Lightning Rod

2.6.2 GILL RADIATION SHIELDS

Attach the Gill Radiation Shield (41002, 41004 and 41301) to the mast as shown in Figure 2-10.

Position the radiation shield on the side of the mast that faces the prevailing wind, with the top of the black plastic mounting base 36" down from the top of the bell reducer on the CM10, or against the bottom of the bell reducer on the CM6.

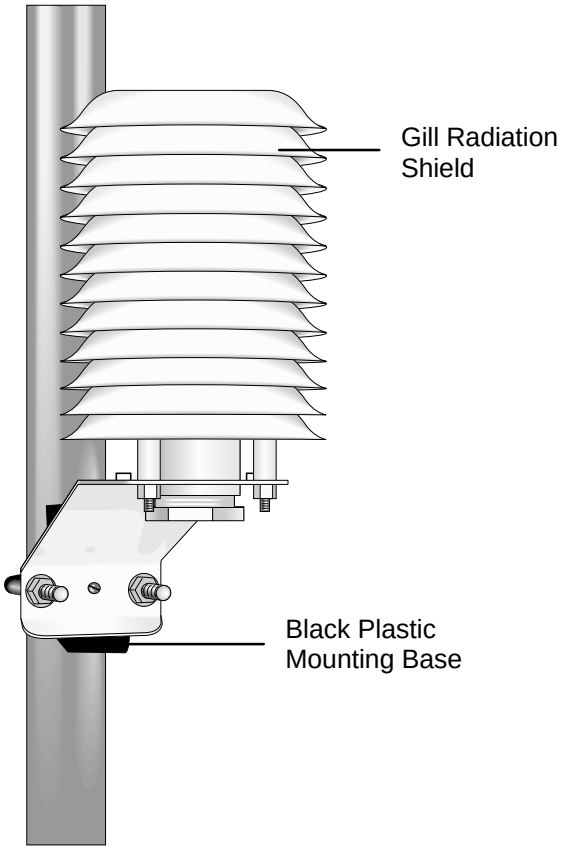

FIGURE 2-10. Gill Radiation Shield

2.6.3 015 PYRANOMETER MOUNTING ARM

Attach the 015 Pyranometer Mounting Arm to the mast as shown in Figure 2-11.

Position the 015 on the south side of the mast (northern hemisphere), with the top of the mounting base 17" down from the top of the bell reducer on the CM10, or 3 1/2" down on the CM6.

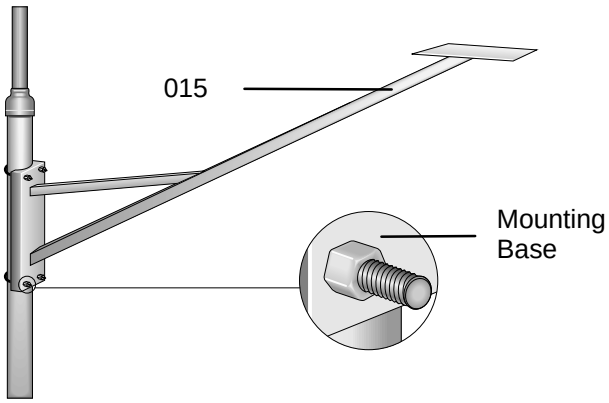

FIGURE 2-11. 015 Pyranometer Mounting Arm

2.6.4 025 PYRANOMETER CROSSARM STAND

Attach the 025 Pyranometer Crossarm Stand to the 019ALU as shown in Figure 2-12.

Position the mounting plate 5" above the 3/4" NU-RAIL and tighten the set screws.

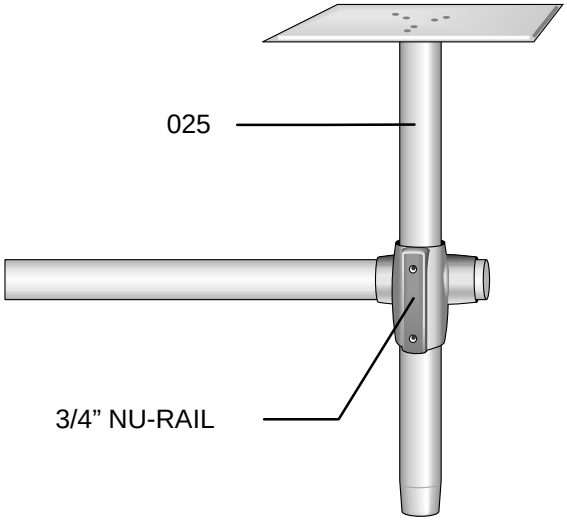

FIGURE 2-12. 025 Pyranometer Crossarm Stand

SECTION 3. METDATA1 INSTRUMENTATION INSTALLATION

3.1 ENCLOSURE, DATALOGGER, POWER SUPPLY

All instrumentation (datalogger, power supply, sensor interface board, communications or data retrieval peripherals) are mounted in the MetData1 enclosure. Bulkhead connectors are provided on the enclosure bottom for connecting external sensors and devices as illustrated in Figure 3.2-1.

Step 1) Mount MetData1 enclosure on the station platform as shown in Figures 3.1-1 or 3.1-2.

1. Position the enclosure on the north side of the mast or tower (northern hemisphere). Orient the enclosure so that the latch is on the right side (as you are facing the enclosure) and the connector panel is on bottom. Tighten U-bolts until enclosure is snug. Do not over tighten since doing so may damage the station platform.

2. Route the 13 AWG wire from the brass grounding clamp on the tripod or tower to the enclosure grounding lug. Insert the end of the wire into the grounding lug and tighten the set screw.

Step 2) Open enclosure by springing the latch on the right side.

Step 3) Install the battery pack option as described in sections 3.1.1 or 3.1.2. Installation of an MSX10 solar panel is described in section 3.1.3.

Step 3) Place a packet of desiccant in the desiccant holder located inside the enclosure lid. Close the enclosure and secure the latch. A lock may be used on the latch for extra security.

3.1.1 BPALK 12 VOLT POWER SUPPLY

The BPALK houses 8 “D” cell batteries. To install the battery pack, loosen the thumb screw and remove cover. Insert the battery pack and plug the battery lead into the connector labeled internal (Figure 3.1-4).

3.1.2 PS12LA 12V POWER SUPPLY WITH RECHARGEABLE BATTERY

The PS12LA houses a sealed monoblock rechargeable battery. To install the battery, loosen the two thumb screws and remove the cover (Figure 3.1-5).

1. With the PS12 power switch "OFF", insert the battery and plug the battery lead into the connector labeled "INT". (Figure 3.1-3)
2. An unregulated solar panel (Section 3.1.3) or charging wall plug transformer should be connected to the MetData1 at all times when the PS12LA is the power supply option. Power connection port is shown in Figure 3.2-1.
3. Turn power switch to "ON", and replace the cover.

3.1.3 MSX10 SOLAR PANEL

MetData1 Solar panels purchased from CSI are shipped with a power connector attached.

1. Mount the MSX10 solar panel to the tower so that it faces south (northern hemisphere) as shown in Figure 3.1-6 or 3.1-7. Position the MSX10 as high off the ground as practical, ensuring that it cannot interfere with air flow or sunlight around the sensors.
2. The solar panel should be oriented to receive maximum insolation over the course of the year. Suggested tilt angles (referenced to the horizontal plane) are listed below.

Site Latitude	Tilt Angle
0 to 10 degrees	10 degrees
11 to 20	Latitude + 5 degrees
21 to 45	Latitude + 10 degrees
46 to 65	Latitude + 15 degrees
>65	80 degrees

3. After determining the tilt angle, loosen the two bolts that attach the mounting bracket to the panel. Adjust the angle, then tighten the bolts. Secure the lead wire to the mast using wire ties.
4. Connect the solar panel to the MetData1 enclosure at the connection port labeled "AC/SOLAR" as shown in Figure 3.2-1.

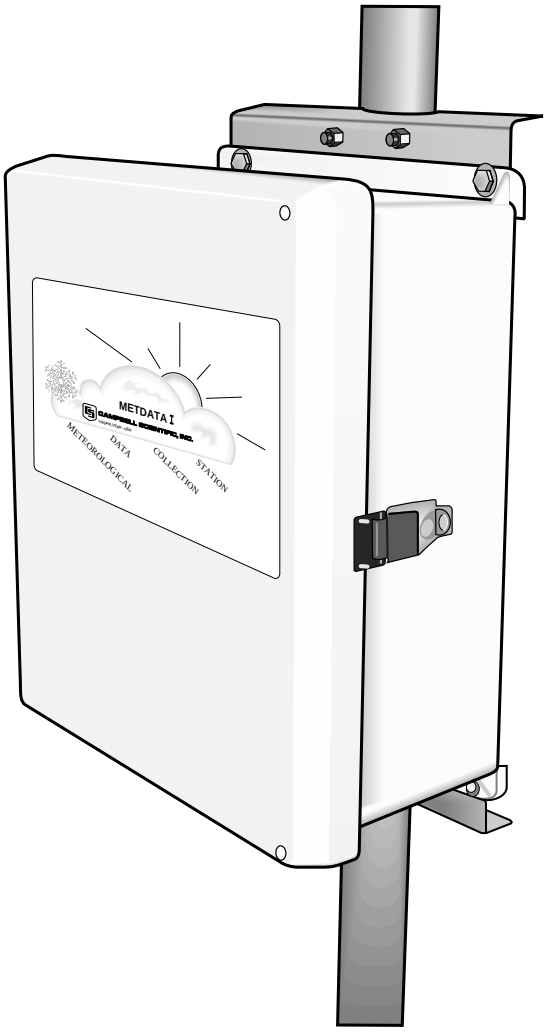

FIGURE 3.1-1. MetData1 Enclosure on CM6 or CM10 Tripod

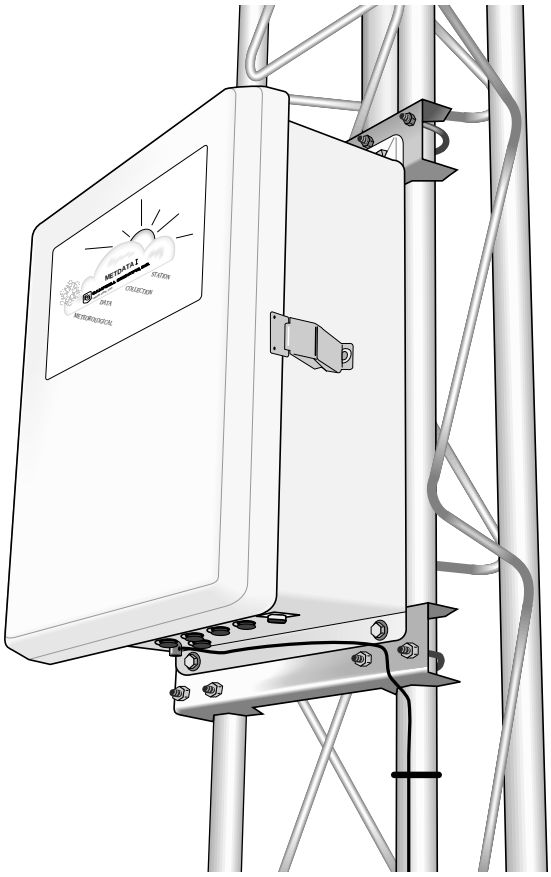

FIGURE 3.1-2. MetData1 Enclosure on UT10 or UT30 Tower

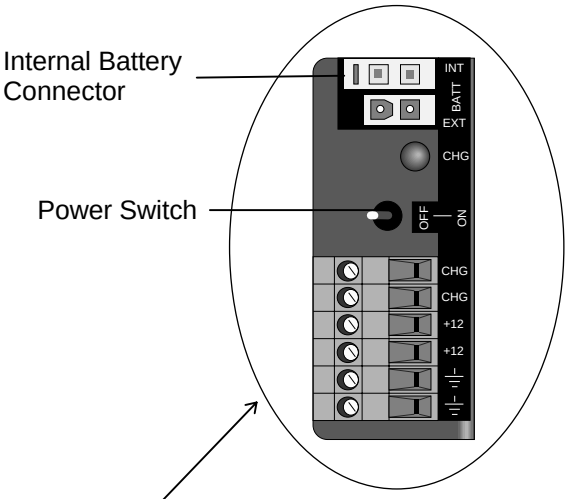

FIGURE 3.1-3. PS12LA/CH12R Wiring and Switch Panel

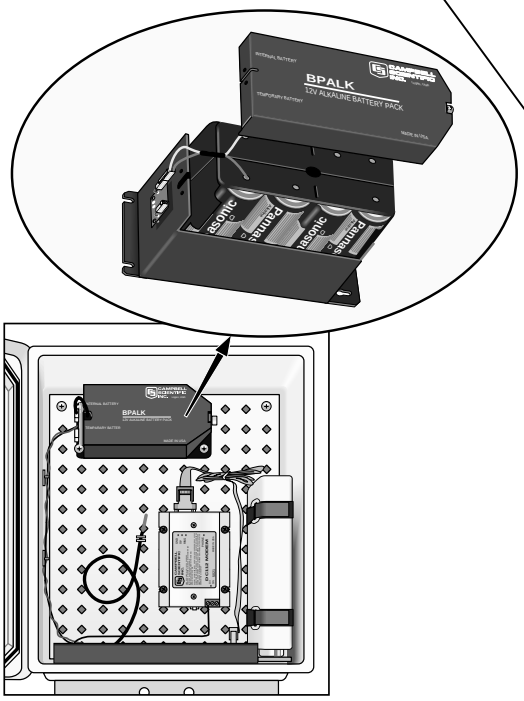

FIGURE 3.1-4. BPALK in MetData1 Enclosure

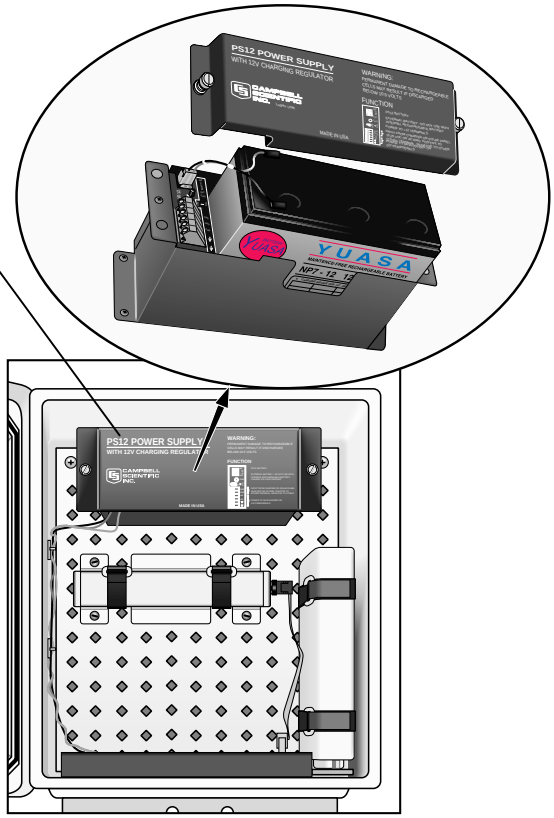

FIGURE 3.1-5. PS12LA in MetData1 Enclosure

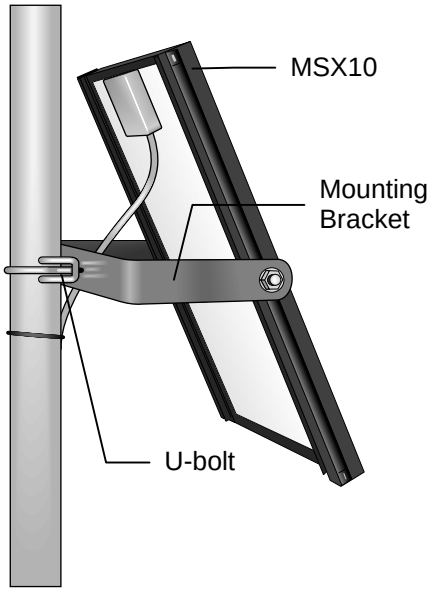

FIGURE 3.1-6. MSX10 Solar Panel on CM6 or CM10 Tripod

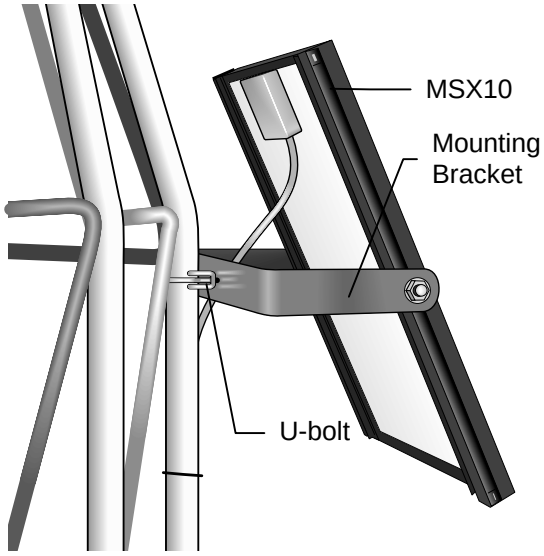

FIGURE 3.1-7. MSX10 Solar Panel on UT10 or UT30 Tower

3.2 SENSOR CONNECTION

External MetData1 sensors connect to one of seven bulkhead connectors on the bottom of the MetData1 enclosure, as shown in Figure 3.2-1. Telephone and short haul modem wires connect to connector #8. All power connections occur at the AC/solar connector. Coaxial bulkhead connectors are installed in the “pop-out”. The ground chuck should be connected to earth ground.

The CS105MD mounts in the enclosure as shown in Figure 3.12-2. Connect to internal wiring panel of MetData1 as shown below:

Green ---------- 6H
White ---------- 6L
Black ---------- GND
Red ---------- 12V Switch

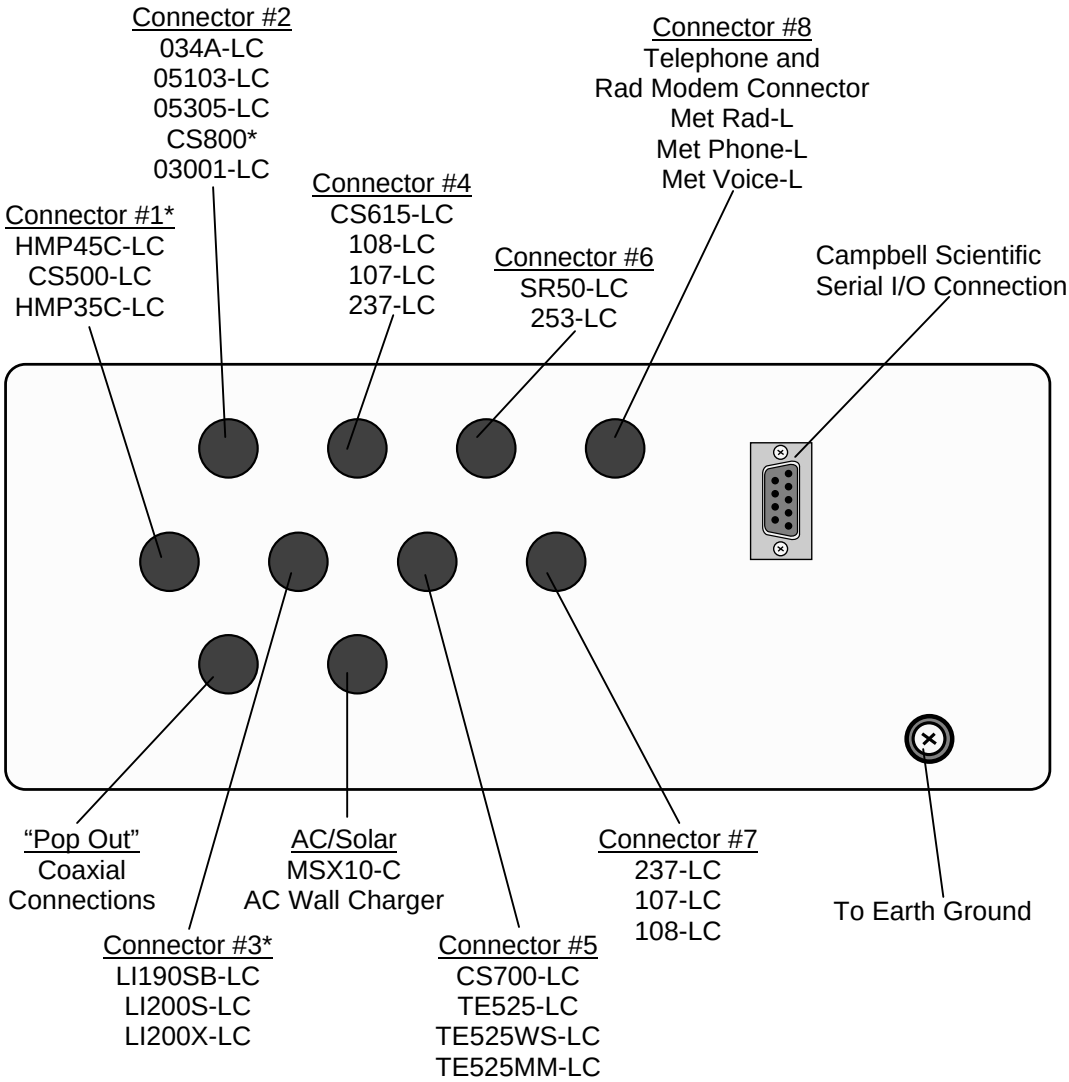

*Configure MetData1 jumpers as shown in Figure 3.2-2.

FIGURE 3.2-1. Illustration of MetData1
External bottom panel showing sensor, communication, power, and ground connections.

HMP35C	#1	Closed
CS500	#1	Open
HMP45C	#1	Open
CS800	#4	Right
LI190SB	#3	Closed
	#2	Open
LI200S	#2	Closed
	#3	Open
LI200X	#2, #3	Open

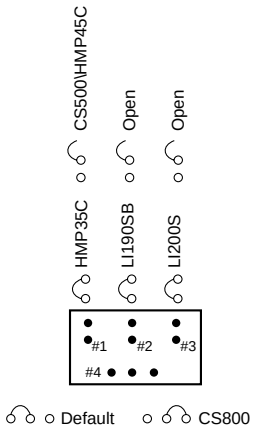

FIGURE 3.2-2. MetData1 Jumper Configuration

3.3 COMMUNICATION AND DATA STORAGE PERIPHERALS FOR METDATA1

One or more peripherals (i.e., storage modules, modems, relay drivers, etc.) can be mounted to the MetData1 enclosure backplate.

3.3.1 SM192/SM716 STORAGE MODULE

Storage modules extend the amount of memory that is available for storing data, provide on-site backup for data and programs, and provide a means of transporting data from remote sites.

Mount the SM192 mounting bracket to the enclosure backplate as shown in Figure 3.3-1 using the four nylon inserts and screws provided.

Connect the storage module to the MetData1's I/O port with the SC12 cable. Place the storage module in the bracket and fasten the Velcro straps.

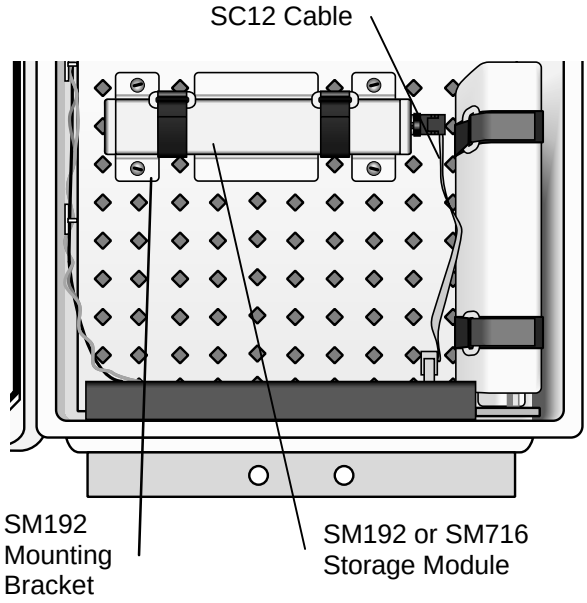

FIGURE 3.3-1. SM192/SM716 Storage Module

3.3.2 MET PHONE COM200/VS1/COM300 PHONE MODEMS

The Met Phone Kit contains:

(1) Phone Modem
(1) SC12 Cable
(1) RJ-11 Patch Cord (12")
(4) Nylon Backplate Inserts
(4) Screws
(1) Direct Bury Splice Kit
(1) Telephone Leader with Connector (20')

Phone Modems enable communication between the MetData1 and a PC (with Hayes compatible Phone Modem) over a dedicated phone line (Figure 3.3-2). An external phone connection cable is provided. Connect the external cable connector end into MetData1 connector #8. Connect the other end to the telephone line in the telephone service box.

Install the Met Phone Kit as shown in Figure 3.2-2.

1. Mount the phone modem to the enclosure backplate with the nylon inserts and screws.

   The telephone company generally provides surge protection. Surge protection is also built into the MetData1 RJ11C jack.

2. Connect the modem 9-pin port to the MetData1 9-pin port with the SC12 cable.

3. Connect the modem RJ-11 port to the MetData1 RJ-11 port with the RJ-11 patch cord.

4. Connect modem ground to MetData1 ground.

5. Connect the telephone leader cable to connector #8 on the external bottom panel of the MetData1 (see Figure 3.2-1).

6. Connect the tip and ring lines of the telephone leader to the commercial phone system, either at a service box or using the direct bury splice kit provided.

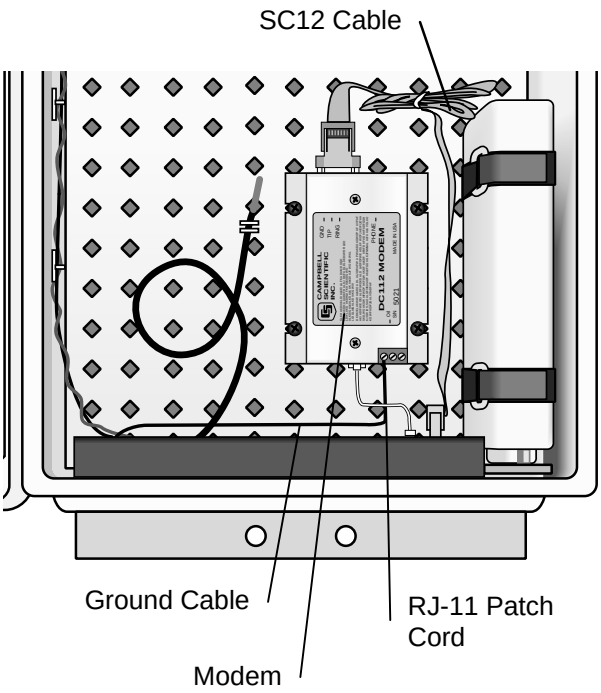

FIGURE 3.3-2. Telephone Modem Installation

3.3.3 METCELL COM100 CELLULAR TRANSCEIVER

The MetCell COM100 requires the use of the CR10KD or SC32A for initial programming of the MetData1.

> **CAUTION:** Do not connect transceiver power until antenna is connected.

Cellular service and programming of your transceiver must be coordinated with your local cellular provider. A cellular transceiver enables communication between the datalogger and a PC (with a Hayes compatible phone modem) over cellular phone service.

Install the MetCell cell phone kit as shown in Figure 3.3-3.

1. As shown in Figure 3.2-1, a “pop-out” plug is provided adjacent to the AC/Solar connector for installing the coaxial bulkhead connector. Remove the “pop-out” plug by pushing it out from inside the enclosure with a screw driver. Wear gloves while doing this to protect your hands when the plug gives way. Install the coaxial bulkhead connector.
2. Install the modem and cellular transceiver with the nylon inserts and screws provided.
3. Connect the modem 9-pin port to the MetData1 internal 9-pin port with the SC12 cable.
4. Connect the modem RJ-11 port to the MetData1 RJ-11 port with the RJ-11 patch cord.
5. Connect the antenna to the external side of the coaxial bulkhead connector.
6. Connect the 12V line and ground lines from the COM100 to the PS12 power supply.

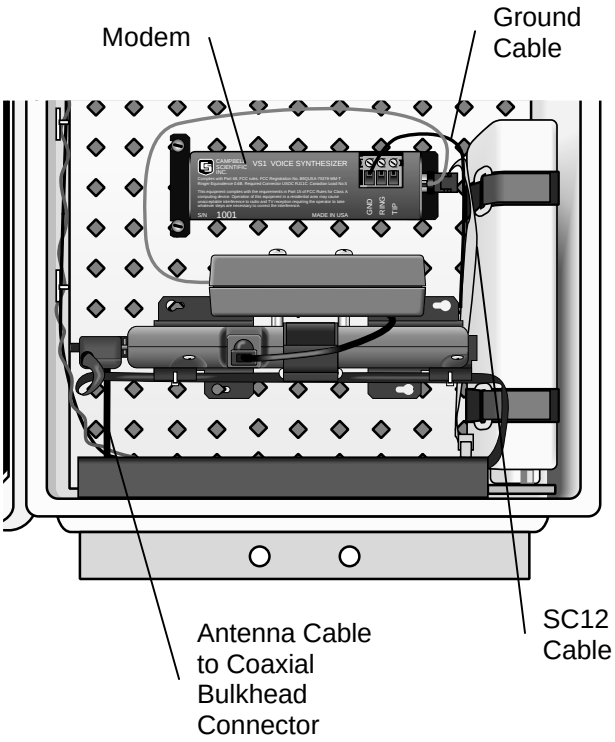

FIGURE 3.3-3. Phone Installation

3.3.4 METRAD SRM-5A RAD MODEM AND SC932C INTERFACE

Rad Modems enable communication between a datalogger and computer over two twisted pairs of wires. The maximum distance between modems is determined by baud rate and wire gauge. At 9600 baud the approximate range is 4.0 miles.

The MetRad kit includes:

(2) Rad modems
(2) Nylon Inserts
(2) Screws
(1) Rad Modem 4-Wire Patch Cable
(1) SC932C 9-Pin Interface
(1) Ground Wire
(1) Surge Protector Kit
(2) Burial Splice Kits
(1) Mounting Bracket
(1) PC 4-Wire Leader
(1) Met-Rad 4-Wire Leader with Connector
(1) Length of User-Supplied Wire
(Supplier: Anixter, P/N F-02P22BPN, 708-677-2600)

3.3.4.1 MetRad at MetData1

Install the MetRad as shown in Figure 3.3-4.

1. Plug the SRM-5A into the SC932C. Position the notched tabs in the mounting bracket over the two screws in the SRM-5A (refer to Figure 3.3-4). Thread the SRM-5A screws through the bracket and into SC932C.
2. Mount the SRM-5A/SC932C mounting bracket into the MetData1 using the 2 nylon inserts and screws.
3. Connect the SC932C 9-pin port to the MetData1 internal 9-pin port with the SC12 cable.
4. Connect the SRM-5A to the MetData1 with the short 4 wire patch cord provided. Match wire labels to MetData wiring panel labels (+XMT to +XMT, etc.).
5. Connect the 20 foot 4 wire leader to connector #8 on the bottom external MetData1 panel. See Figure 3.2-1 for connector #8 location. Splice this cable to the user supplied cable using the burial splice kits.

3.3.4.2 MetRad at the PC

1. Mount the Surge Protector to a flat surface (close to the PC). Ground the center terminal to an earth (or building) ground using the 12 AWG ground wire.
2. Connect the 4-wire leader cable to the SRM-5A as shown in Figure 3.3-4. Fasten the cable to the strain relief tab with a cable tie. Connect the SRM-5A to the PC's serial port using an SC25PS cable for 25-pin serial ports, or a PN7026 cable for a 9-pin serial port.
3. Route the user-supplied cable from the remote SRM-5A, and the cable from the SRM-5A attached to the computer to the surge protector box. Connect the cables to the surge protector terminals as shown in Figure 3.3-5.

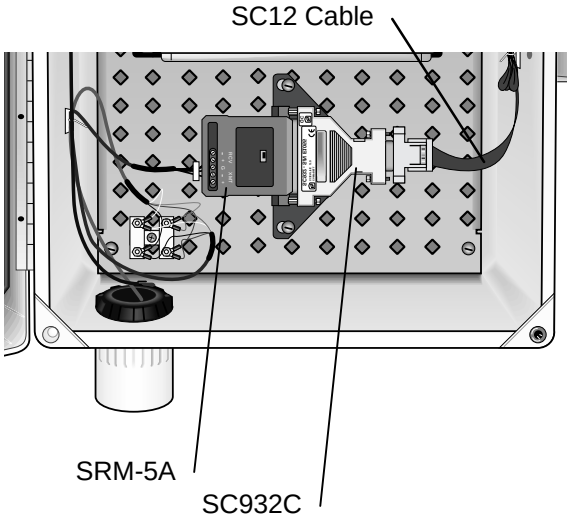

FIGURE 3.3-4. SRM-5A and SC932C in MetData1

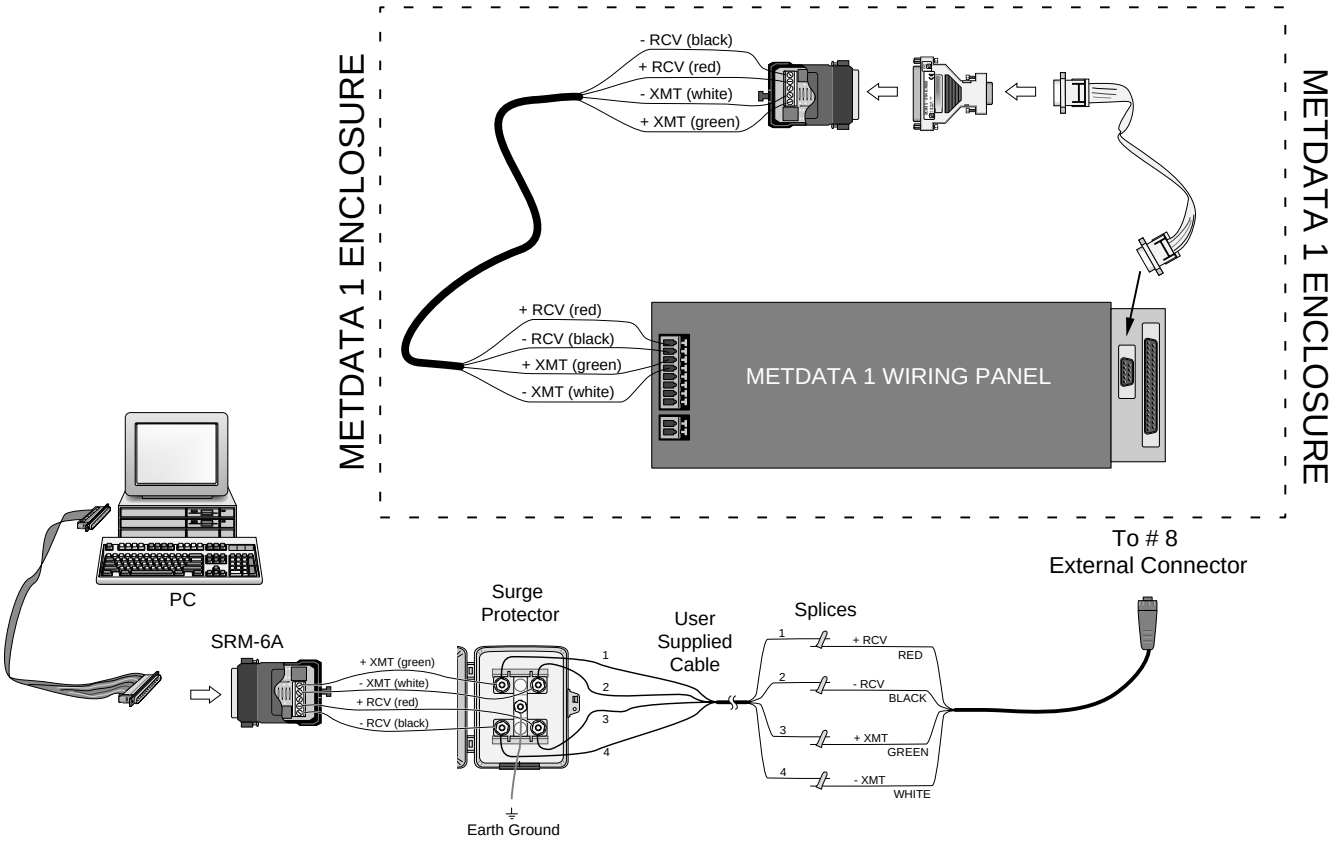

FIGURE 3.3-5. SRM-5A Wiring

3.3.5 RF95 RF MODEM AND RF100/RF200 TRANSCEIVER

> **CAUTION:** Do not connect transceiver power until antenna is connected.

Radiotelemetry (RF) enables communications between one or more MetData1s/dataloggers and a PC over an FCC-assigned radio frequency in the VHF or UHF band. The maximum distance between any two communicating stations is approximately 20 miles and must be line-of-sight. Longer distances and rough terrain may require intermediate repeater station(s). Refer to the Radiotelemetry Network Applications manual for RF repeater stations and RF Networks accessed remotely by phone.

3.3.5.1 RF95 Modem and RF100/RF200 Transceiver at the MetData1

1. Remove the four screws that attach the lid to the RF95 modem. Remove the RF95 case lid. Remove the center screw from the circuit board. Remove the circuit board.

2. Mount the bottom half of the RF95 case into the MetData1, orienting it as shown in Figure 3.3-5. Replace the circuit board and center screw.

3. Set the dip switches on the circuit board to the appropriate Station ID (Table 3.3-1). Each RF95 must have a unique station ID; address 1 is usually used for the base station, address 2 for first remote station, address 3 for the next remote station, etc. Switch 9 should be in the "OPEN" position. Do not tighten the four lid screws at this time.

4. Replace the lid. Place the radio mounting bracket and radio on the RF95 and tighten the four lid screws.

5. Locate the short coaxial cable with the bulkhead connector on the end. Install the

bulkhead connector into the “punch-out” hole, located as shown in Figure 3.3-5. Install the bulkhead connector so that the cable is inside the MetData1. Connect the other end of the cable to the radio’s BNC connector.

6. Mount the antenna to the mast according to the manufacturer's instructions. Connect the antenna cable to the antenna and route the cable. Connect the antenna cable to the outside end of the coaxial bulkhead connector as shown in Figure 3.3-5. Wrap the connection with the self-vulcanizing rubber provided.

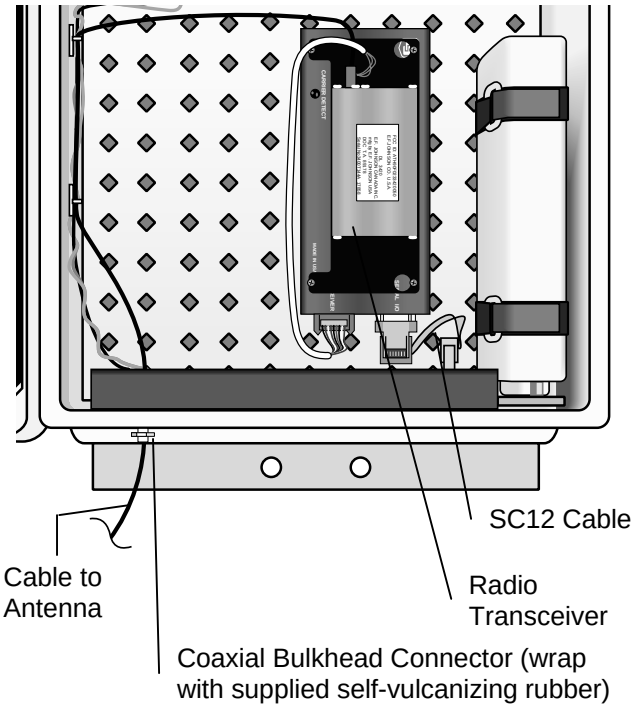

FIGURE 3.3-5. RF95 RF Modem and RF100/RF200 Transceiver

TABLE 3.3-1. Station ID Numbers and Corresponding Switch Settings**

Station ID	Switch Settings 1234	56789
0	0000	0000X
1	1000	0000X
2	0100	0000X
3	1100	0000X
4	0010	0000X
5	1010	0000X
6	0110	0000X
7	1110	0000X
8	0001	0000X
9	1001	0000X
10	0101	0000X
11	1101	0000X
12	0011	0000X
*255	1111	1111X

** Station ID 255 is reserved for phone-to-RF base stations.*
*** See Appendix A in the Radiotelemetry Network Applications Manual for a table of switch settings.*

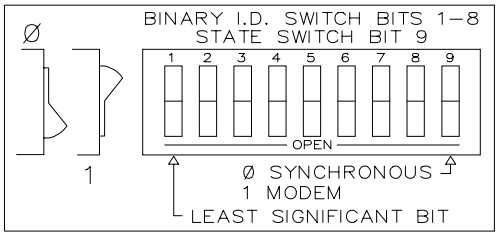

3.3.5.2 RF232 RF Base Station

1. Install the base station antenna according to the manufacturer's instructions. Connect the antenna cable to the antenna and route the cable to the RF232.

2. With the power cord disconnected, remove the four screws that attach the RF232 lid. Remove the lid, and install the RF200 transceiver as shown in Figure 3.3-6. Connect the red wire to the "12 V" terminal, and the black wire to the "⏚" terminal inside the RF232. Connect the multi-colored ribbon cable to the RF modem; make sure that the keyway is properly aligned.

3. Connect the antenna cable to the antenna connector on the RF200. Reassemble the RF232 lid using the screws previously removed.

4. With the power switch "OFF", connect the power cord to 110V AC. Connect the serial port to the computer's serial port using an SC25PS cable for a 25-pin serial port, or a PN7026 cable for a 9-pin serial port. Toggle the power switch to "ON" to operate the RF232.

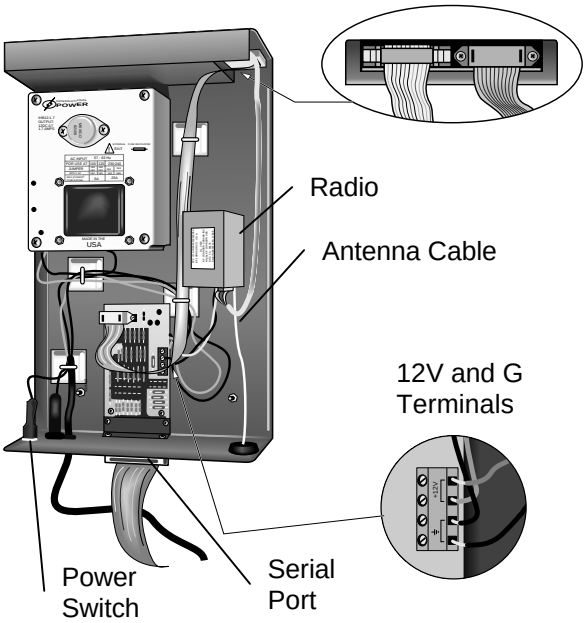

FIGURE 3.3-6. RF232 Base Station Installation

3.3.6 MD9 MULTIDROP INTERFACE

The MD9 Multidrop Interface enables communication with one or more MetData1s/dataloggers and the computer over a single 75 ohm coaxial cable. An MD9 network can be connected directly to a PC, or can be connected to a telephone modem (refer to the MD9 Manual) and accessed remotely.

Total coax length may be up to three miles. Since each MD9 attenuates the signal 0.2 db, the maximum length depends on the number of MD9s in the network (refer to the MD9 manual).

Coaxial cable and BNC connectors may be ordered from CSI, or purchased locally (Belden Type 9100 RG59/U or equivalent). Call Belden Wire and Cable at (317) 983-5200 for the name of a local distributor.

Installation requirements depend on the type of cable that is used, and how it is installed (direct burial, conduit, etc.). In general, follow state and local electrical codes.

3.3.6.1 MD9 Multidrop Interface at the MetData1

1. Remove the four screws that attach the lid to the MD9. Remove the lid. Remove the center screw from the circuit board. Carefully remove the circuit board.
2. Mount the lower half of the case into the MetData1 using the inserts and screws provided. Replace the circuit board and center screw.
3. Set the dip switches on the circuit board to the appropriate Station ID (Table 3.3-2). Each MD9 must have a unique ID; address 1 is usually used for the MD9 at the computer, address 2 for the next MD9, address 3 for the next MD9, etc. The default baud rate is 9600, which can be changed with the jumpers next to the dip switches (Table 3.3-2).
4. Replace the lid.
5. A “pop-out” plug is provided adjacent to the AC/Solar connector for mounting the coaxial bulkhead connector into the enclosure as shown in Figure 3.3-5. Remove the “pop-out” plug by pushing it out from inside the enclosure with a screw driver. Wear gloves while doing this to protect your hands when the plug gives way. Install the coaxial bulkhead connector. Attach the short coaxial cable to the MD9’s coax connectors to the inside end of the bulkhead connector. Attach the main coaxial cable to the outside end of the bulkhead connector. Wrap the outside connection with the provided self-vulcanizing rubber.
6. Route the coaxial cable(s) to the MD9. Connect the cable(s) to the MD9 using the BNC "T" provided. The first and last MD9s of the network must be terminated with 75 ohm Coax Terminators (Model MD9CT) to prevent signal reflection.

3.3.6.2 MD9 Multidrop Interface at the Computer

Connect the MD9 and the SC532 9 Pin Peripheral to RS232 Interface to the computer as shown in Figure 3.3-8.

1. Connect the SC532 to the computer's serial port using an SC25PS cable for a 25-pin serial port, or a PN7026 cable for a 9-pin serial port. Connect the MD9 to the SC532 with an SC12 cable.
2. Route the coaxial cable to the MD9; connect the cable and an MD9CT to the MD9 using the BNC "T" provided.

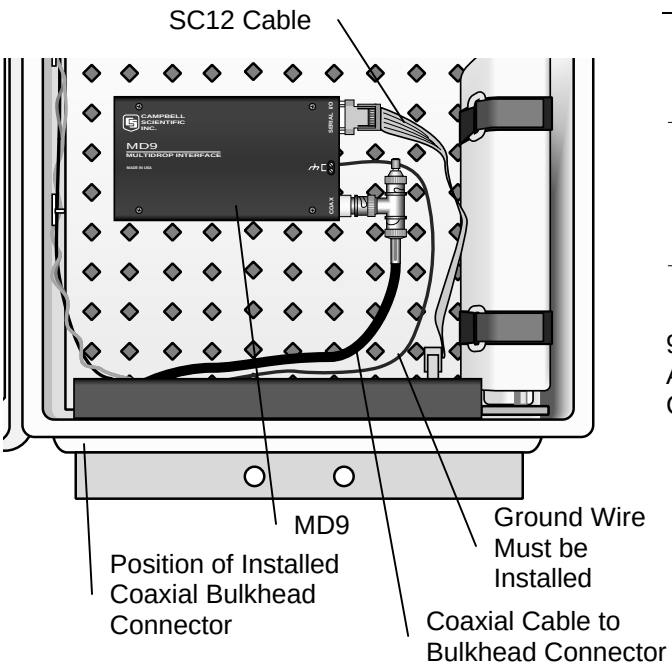

FIGURE 3.3-7. MD9 Multidrop Interface in MetData1

TABLE 3.3-2 Station ID Numbers and Corresponding Switch Settings

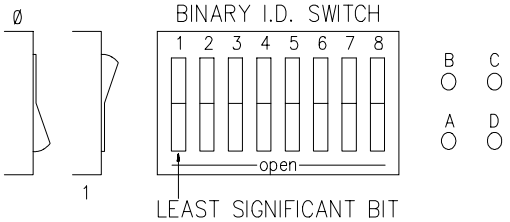

9600 Baud	1200 Baud	300 Baud
A-B Short	A-B Open	A-B Short
C-D Short	C-D Short	C-D Open

Station	Switch Settings	
ID	1234	5678
0	0000	0000
1	1000	0000
2	0100	0000
3	1100	0000
4	0010	0000
5	1010	0000
6	0110	0000
7	1110	0000
8	0001	0000
9	1001	0000
10	0101	0000
11	1101	0000
12	0011	0000
*255	1111	1111

NOTE: Addresses 1-254 are valid for an MD9 connected to a datalogger or computer. Address 255 is used only when the MD9 is connected to a telephone modem.

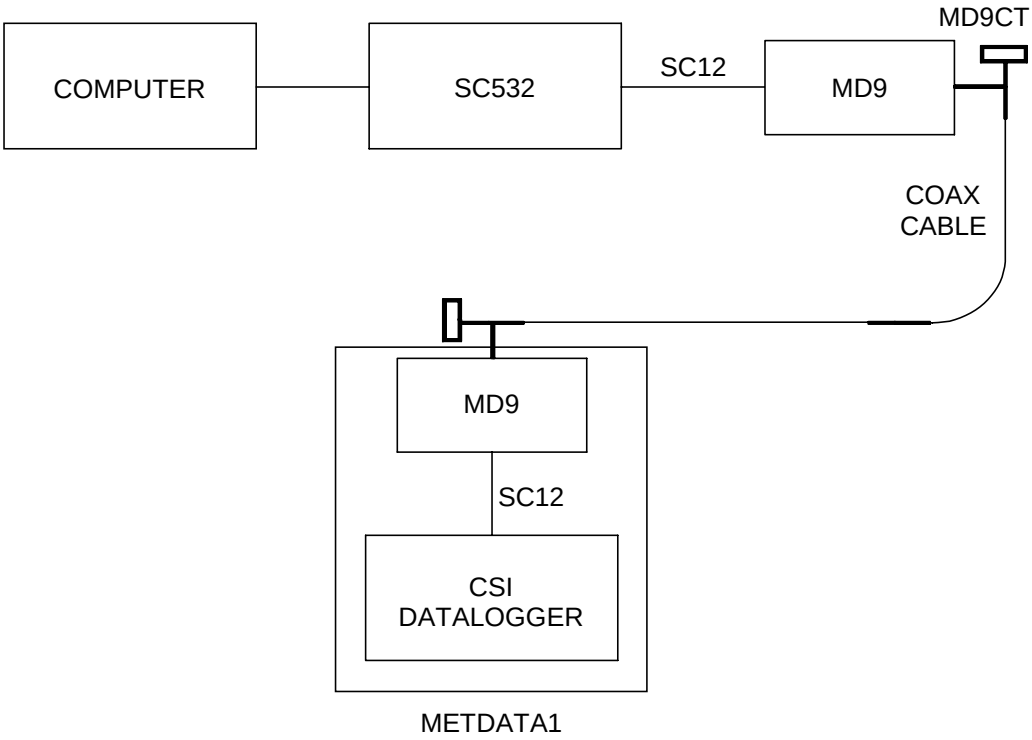

FIGURE 3.3-9. MD9 Multidrop Interface at the Computer and at the MetData1

3.4 SEALING AND DESICCATING THE ENCLOSURE

The MetData1 enclosure is supplied with desiccant packs. The desiccant maintains a low humidity in the enclosure to minimize the chance of condensation on the instrumentation. The desiccant must be changed periodically. Place one or two desiccant packs into desiccant holder just before leaving the installation site. Be sure to close the lid. A desiccant change is indicated when the internal MetData1 humidity sensor measures 30% or higher. Keep unused desiccant tightly sealed in an airtight container.

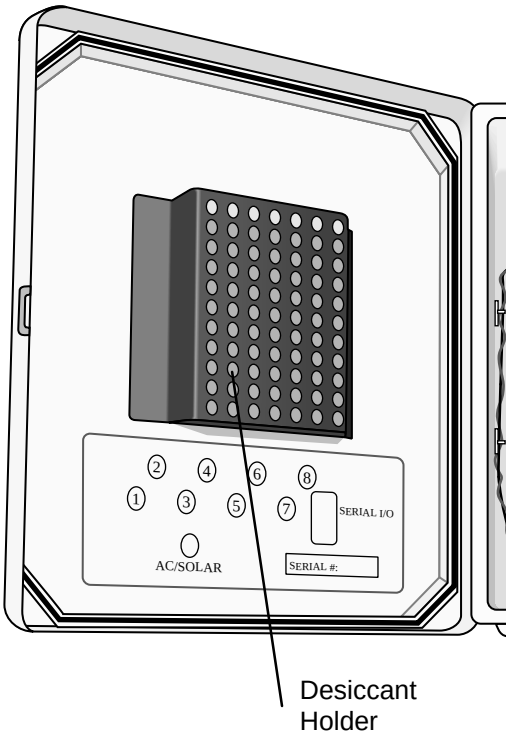

FIGURE 3.4-1. Inside MetData1 Lid

SECTION 4. SENSOR INSTALLATION

Sensor leads should be routed down the North side of the mast to the enclosure and secured with cable ties.

4.1 034A MET ONE WINDSET

Mount the 034A to the 019ALU crossarm as shown in Figure 4.1-1.

1. Place the 034A stem and bushing into the 3/4" x 1” NU-RAIL fitting.

2. With the shoulder screw in place, orient the counter weight to point due south. See Section 4.19 for final calibration.

3. Tighten the NU-RAIL set screws and remove the shoulder screw.

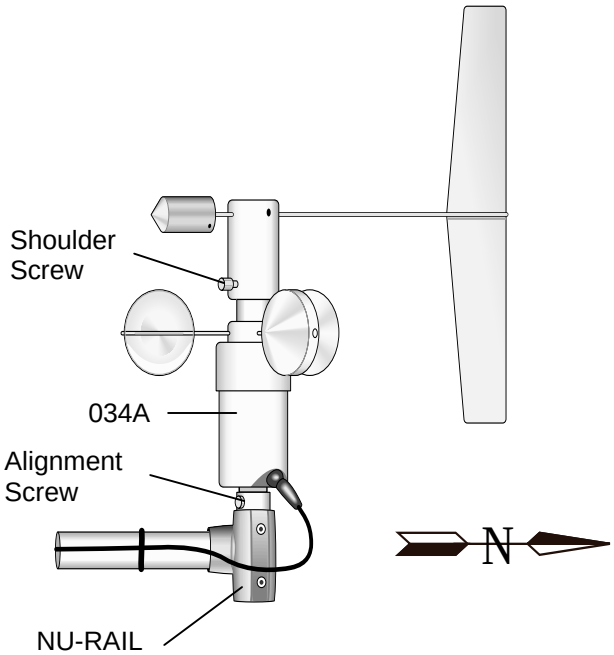

FIGURE 4.1-1. Met One 034A Wind Speed and Direction Sensor

4.2 014A MET ONE WIND SPEED SENSOR

Mount the 014A sensor to the 019ALU crossarm as shown in Figure 4.2-1.

1. Insert the base of the sensor through the 3/4" NU-RAIL. Position the sensor 1" below the NU-RAIL and tighten the set screws.

2. Connect the sensor lead to the sensor. A small amount of lithium grease applied to the threads of the connector will prevent problems due to corrosion.

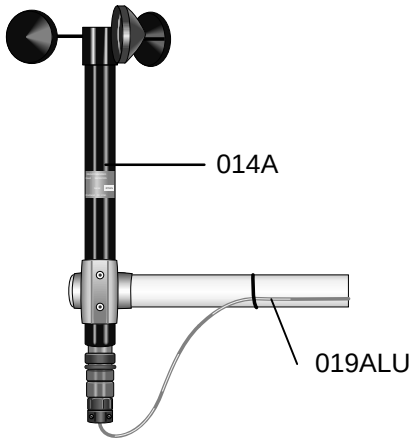

FIGURE 4.2-1. Met One 014A Wind Speed Sensor

4.3 024A MET ONE WIND DIRECTION SENSOR

Mount the 024A sensor to the 019ALU crossarm as shown in Figure 4.3-1.

1. Remove the hex-head screw located 3" from the base of the sensor. Insert the base of the sensor through the aluminum bushing provided with the sensor. Align the hole in the bushing with the hole in the sensor and replace the screw.

2. Insert the base of the sensor through the 1" NU-RAIL until the bushing screw rests on the NU-RAIL. Orient the sensor so the counter weight points south and tighten the set screws (see Section 4.19 for final calibration). Remove the shoulder screw to allow the vane to rotate.

3. Connect the sensor lead to the sensor. A small amount of lithium grease applied to the threads of the connector will prevent problems due to corrosion.

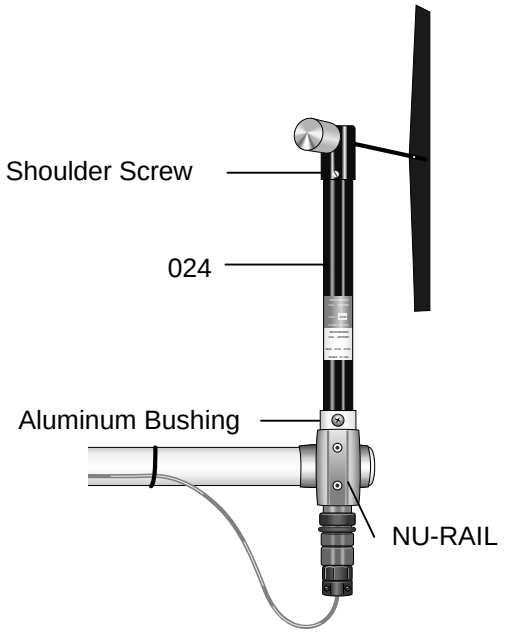

FIGURE 4.3-1. Met One 024A Wind Direction Sensor

4.4 05103 AND 05305 RM YOUNG WIND MONITORS

Mount the 05103 (or 05305) to the 019ALU crossarm as shown in Figure 4.4-1.

1. Position the top of the mounting post 5" above the 1" NU-RAIL and tighten the set screws.

2. Slide the orientation ring and the 05103 onto the mounting post. Rotate the sensor base so that the square wiring box points south. Engage the key in the orientation ring with the keyway on the sensor and tighten the band clamps (see Section 4.19 for final calibration).

3. Remove the plastic nut on the propeller shaft. Slide the propeller onto the shaft (face the side with the lettering out) and replace the nut.

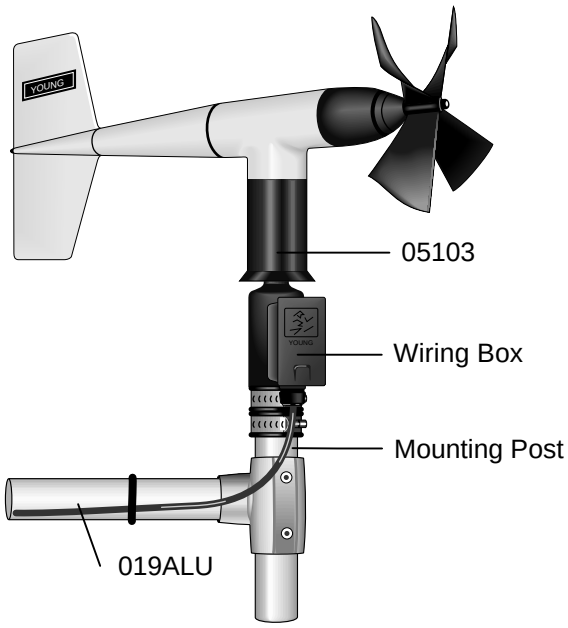

FIGURE 4.4-1. 05103 RM Young Wind Monitor

4.5 03001 RM YOUNG WIND SENTRY WIND SET

The 03001 can be mounted directly to the mast, or to the 019ALU Crossarm.

4.5.1 03001 MOUNTED TO THE MAST

Mount the 03001 to the mast as shown in Figure 4.5-1.

1. Slide the crossarm mounting bracket onto the mast. Orient the crossarm so the vane end points north, and tighten the band clamp (see Section 4.19 for final calibration).
2. Attach the cup assembly to the anemometer shaft using the allen wrench provided.

4.5.2 03001 MOUNTED TO 019ALU CROSSARM

Mount the 03001 to the 019ALU crossarm as shown in Figure 4.5-2.

1. Position the top of the mounting post 5" above the 3/4" NU-RAIL and tighten the set screws.
2. Slide the crossarm mounting bracket onto the mounting post. Orient the crossarm so the vane end points north, and tighten the band clamp (see Section 4.19 for final calibration).
3. Attach the cup assembly to the anemometer shaft using the allen wrench provided.

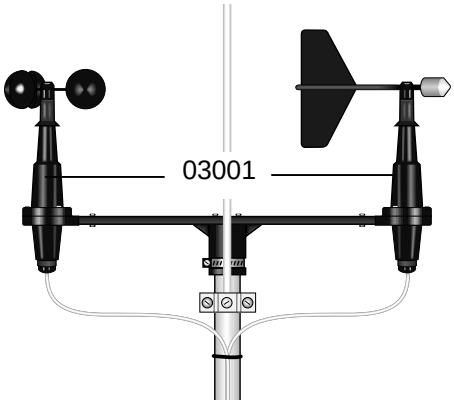

FIGURE 4.5-1. 03001 Mounted to the Mast

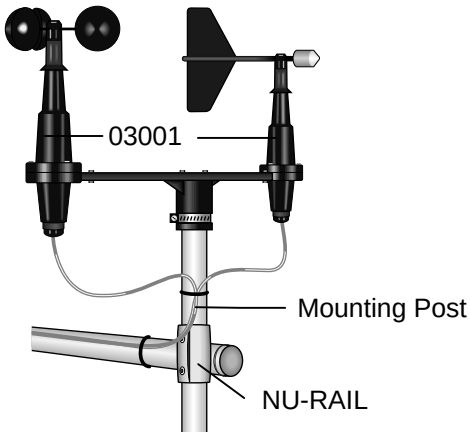

FIGURE 4.5-2. 03001 Mounted to 019ALU Crossarm

4.6 03101 RM YOUNG WIND SENTRY ANEMOMETER

Mount the 03101 to the 019ALU crossarm as shown in Figure 4.6-1.

1. Screw the mounting post into the mounting bracket on the sensor.
2. Position the top of the mounting post 5" above the 3/4" NU-RAIL and tighten the set screws.
3. Attach the cup assembly to the anemometer shaft using the allen wrench provided.

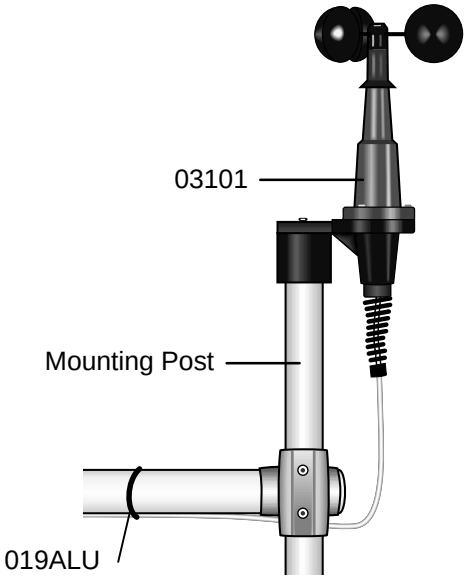

FIGURE 4.6-1. 03101 RM Young Wind Sentry Anemometer

4.7 LICOR SILICON RADIATION SENSORS (LI200X, LI200S, LI190SB)

Mount the Radiation Sensor to the LI2003S Base and Leveling Fixture as shown in Figure 4.7-1.

1. Position the base of the sensor in the mounting flange on the LI2003S, and tighten the set screw with the allen wrench provided. Adjust the three leveling screws flush with the bottom of the LI2003S.

2. Mount the LI2003S to the 025 or 015 (Section 2.2) using the three mounting screws provided. Do not tighten the screws at this time.

3. Level the LI2003S using the bubble level and leveling screws and tighten the mounting screws. **Remove the red protective cap prior to use.**

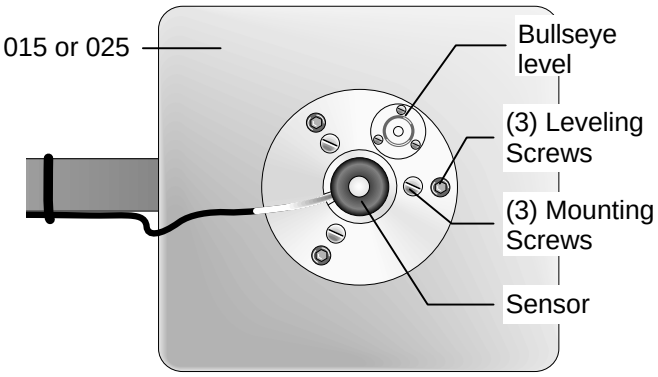

FIGURE 4.7-1. LI200X/LI200S/LI190SB and LI2003S Leveling Fixture

4.8 107/108 TEMPERATURE PROBE

Mount the 107 temperature probe inside the 41301 (UT6P) 6-Plate Gill Radiation Shield as shown in Figure 4.8-1.

1. Loosen the two mounting clamp screws on the base of the 41301 (UT6P). Insert the 107 probe through the mounting clamp until the white heat shrink is even with the bottom of the clamp.

2. Tighten the two screws evenly until the clamp is snug against the sensor lead.

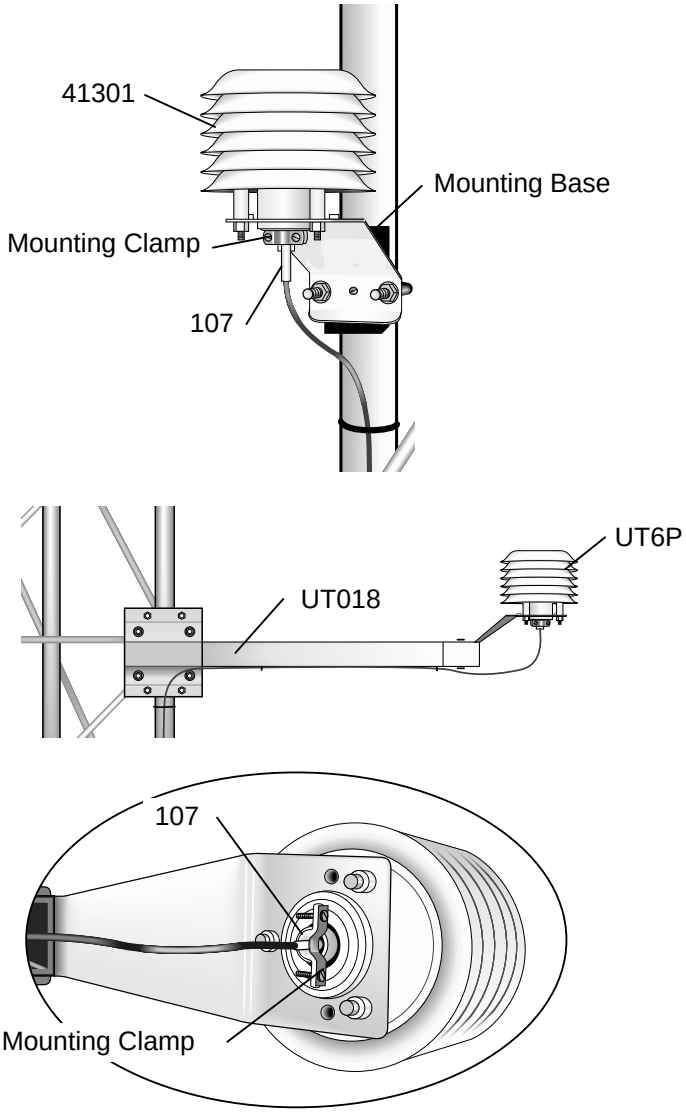

FIGURE 4.8-1. 107 Temperature Probe

4.9 107/108 SOIL TEMPERATURE PROBE

1. Select an undisturbed area of ground on the side of the tower that will receive the least amount of traffic. Route the sensor lead from the datalogger to the selected area.

2. Dig a narrow trench next to the sensor lead, ending the trench at least 6" short of the probe tip. Lay the sensor lead into the trench.

3. Use a screwdriver to poke a horizontal hole into the undisturbed soil at the end of the trench at the appropriate measurement depth. Insert the probe tip into the hole and carefully backfill the trench.

4. If bare soil is required, a soil sterilant such as Paramitol® can be applied to the area where the probe is buried. Soil erosion can be a problem when the probe is under bare soil. To prevent erosion from occurring, bury a 36” square frame constructed from 2” x 4" lumber around the probe, with the top of the frame even with the soil surface.

4.10 CS500 VAISALA TEMPERATURE AND RH PROBE

Mount the CS500 probe inside the 41301 (UT6P) 6-Plate Gill Radiation shield as shown in Figure 4.10-1.

1. Loosen the two mounting clamp screws on the base of the radiation shield. Insert the CS500 sensor through the clamp until the base of the sensor is even with the bottom of the clamp.

Tighten the two screws evenly until the clamp is snug against the sensor base.

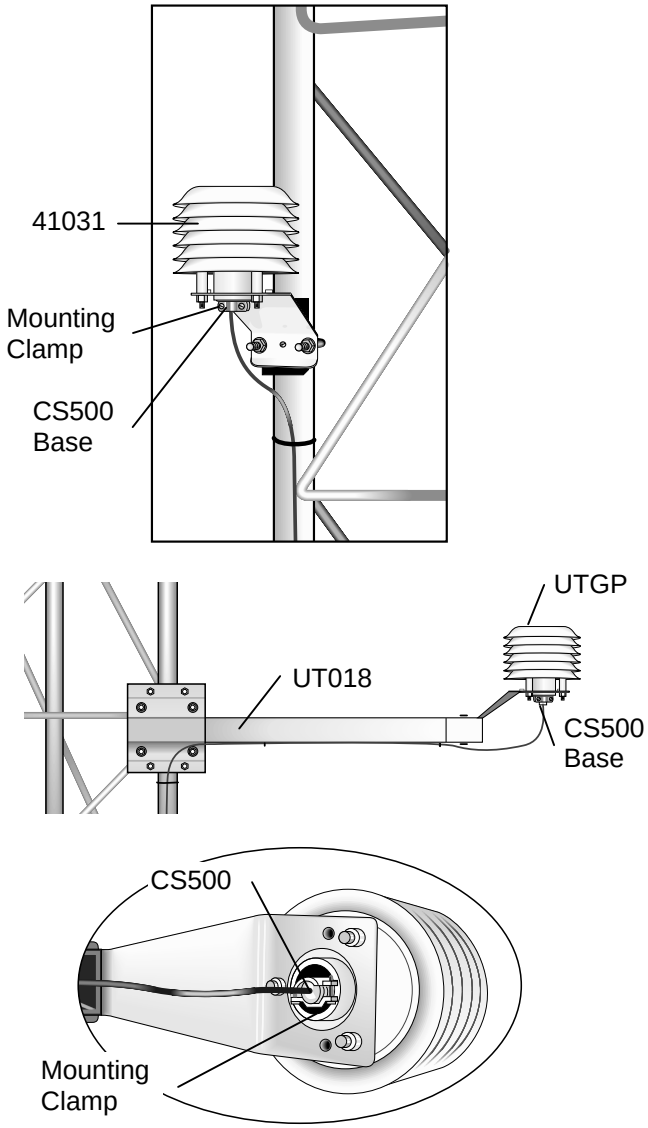

FIGURE 4.10-1. CS500 Temperature and RH Probe

4.11 HMP45C/HMP35C VAISALA TEMPERATURE AND RH PROBE

Mount the probe inside the 41002 or UT12VA 12-Plate Gill Radiation shield as shown in Figure
4.11-1.

1. Loosen the split plastic nut on the base of the shield. Insert the probe and tighten the nut.

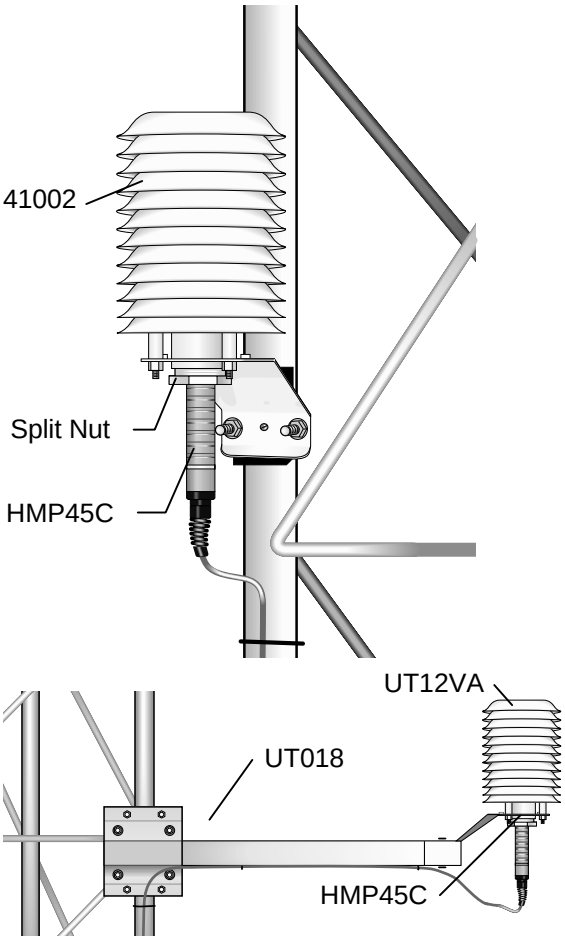

FIGURE 4.11-1. HMP35C Vaisala Temperature and RH Probe

4.12 CS105 VAISALA BAROMETRIC PRESSURE SENSOR

Mount the CS105 sensor to the enclosure backplate as shown in Figure 4.12-1 or Figure 4.12-2.

1. Mount the CS105 to the mounting plate using the two screws and grommets provided.

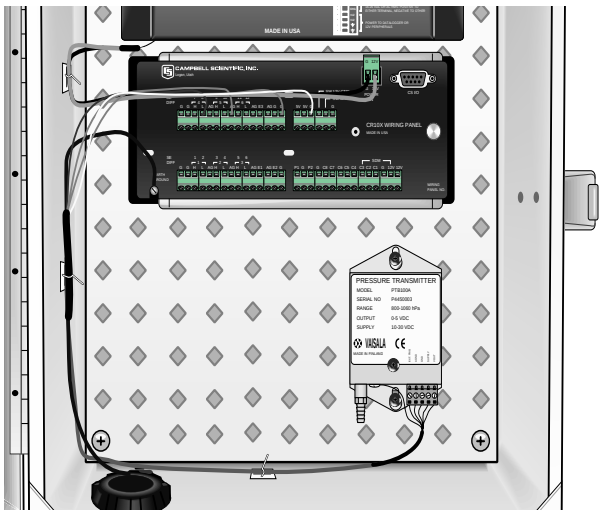

FIGURE 4.12-1. CS105 Vaisala Barometric Pressure Sensor in a Standard Weather Station Enclosure

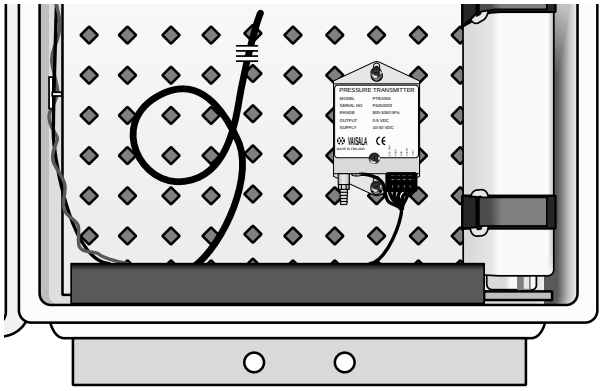

FIGURE 4.12-2. CS105MD Vaisala Barometric Pressure Sensor in a MetData1 Enclosure

4.13 TEXAS ELECTRONICS TIPPING BUCKET RAIN GAGES (TE525, TE525WS, TE525MM)

1. Mount the rain gage to a vertical pipe as shown in Figure 4.13-1. Mounting the gage directly to the tripod or tower is not recommended.

2. Dig a 6" diameter hole 24" deep.

3. Center a 1 1/4" to 2" IPS pipe in the hole and fill the hole with concrete. Use a level to plumb the pipe as the hole is filled.

4. After the concrete has cured, attach the rain gage to the top of the pipe with the hose clamps provided. Route the sensor lead to the tripod in plastic or metal conduit.

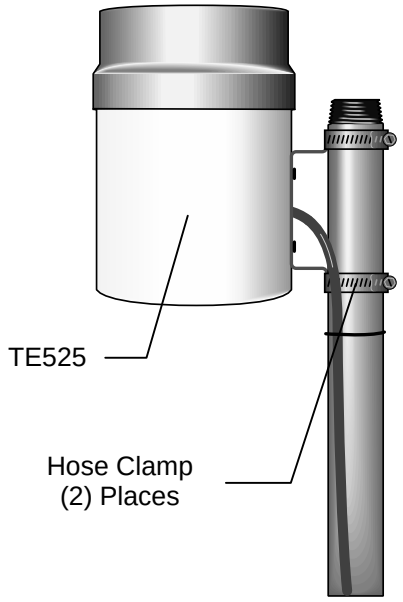

FIGURE 4.13-1. TE525 Texas Electronics Rain Gage

4.14 CS700-L RAIN GAGE

The CS700-L should be mounted in a relatively level spot that is representative of the surrounding area. The lip of the funnel should be horizontal and at least 30 inches above the ground. The ground surface around the rain gage should be natural vegetation or gravel. The gage should not be installed over concrete or pavement.

1. Mount the CS700 to either the CM100 (Figure 4.14-1) or a user supplied bracket. Remove the CS700-L funnel from the base by removing the three screws and lifting upward. Adjust the three nuts on the CM100 bracket to level the rain gage. On user supplied brackets, shims or washers can be used to level the rain gage. A bubble level is mounted on the CS700-L base to facilitate leveling.

2. Remove the rubber shipping band and cardboard packing securing the tipping bucket assembly. Tip the bucket several times to insure the tipping mechanism is moving freely.

3. Replace the housing assembly and tighten the three screws to secure the housing to the base.

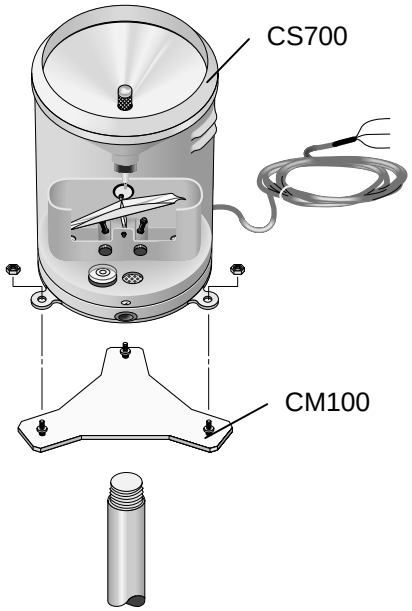

FIGURE 4.14-1. CS700-L Rain Gage and CM100 Mounting Bracket

4.15 SR50 SONIC RANGING SENSOR

The SR50s mounting stem enables various installation options. A 3/4" x 1" NU-RAIL (CSI part number 1049) enables the SR50 to mount to a horizontal 3/4" pipe. The mounting stem also has 1" pipe thread to accommodate other threaded installation options. The UT018 crossarm and part number 6880 bracket can be used to mount the SR50 to 3/4" - 1.25" diameter vertical pipe.

The SR50 should be mounted perpendicular to the target surface, without obstructions. See Figure 4.15-1.

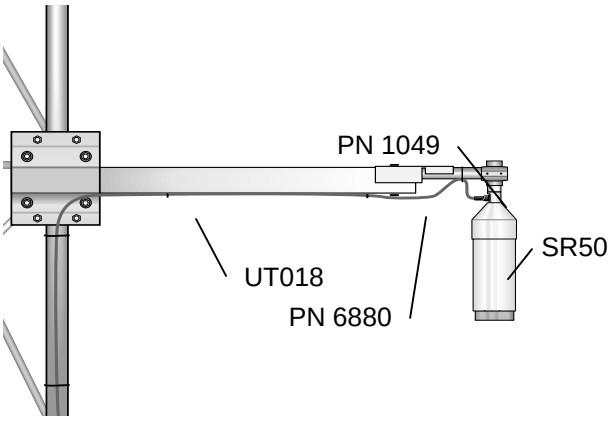

FIGURE 4.15-1. SR50 Sonic Ranging Sensor

4.16 CS615 WATER CONTENT REFLECTOMETER

Probe rods can be inserted vertically or horizontally into the soil surface, as shown in Figure 4.16-1, or buried at any orientation to the surface. A probe inserted vertically into a soil surface will give an indication of the water content in the upper 30 cm of soil. Horizontal installation will detect the passing of wetting fronts. Insertion at a 30 degree angle with the surface will measure water content in the upper 15 cm of soil.

Probes must be inserted such that no air voids are created around the rods, and that the rods remain as parallel as possible. Use the CS615G probe insertion guide to minimize errors due to improper insertion.

The standard calibration for the CS615 probe, as programmed in Short Cut, is valid for loamy soils with low organic content. In other types of soils, reporting the output in units of period will make it possible to apply your own calibration during post processing of data.

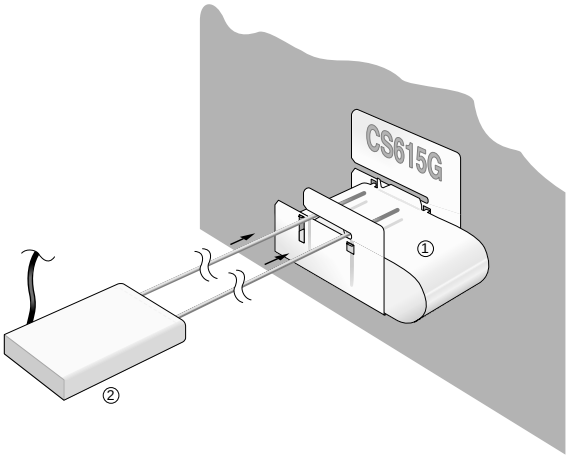

FIGURE 4.16-1. CS615 Water Content Reflectometer with CS615G Probe Insertion Guide

4.17 237 LEAF WETNESS SENSOR

Mounting and orientation considerations are left to the user to determine. Consult the 237 manual for preparation and other information. Normally, the sensor is mounted away from the meteorological tower in or near a plant canopy.

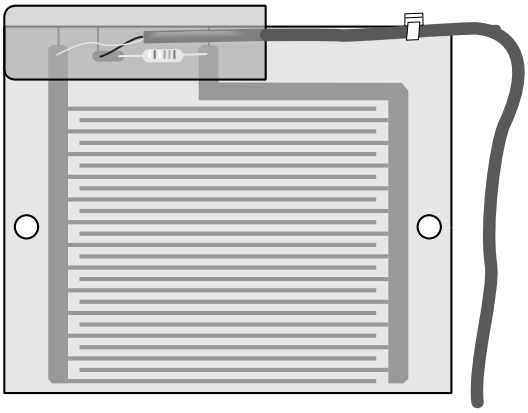

FIGURE 4.17-1. 237 Leaf Wetness Sensor

4.18 257 SOIL MOISTURE SENSOR

1. Soak the sensor end of the 257 in irrigation water for 12 to 14 hours. Allow the sensor to dry for 1 to 2 days after soaking and repeat the soak/dry cycle twice to improve sensor response. Always install a wet sensor.

2. Install the sensor into soil representative of the field conditions you wish to monitor. Avoid high or low spots. Placement south of the weather station mast (northern hemisphere) will avoid the effects of the mast shade. Installation in the root zone is best if measurements are used for irrigation purposes.

3. The 257 should be removed from the soil prior to harvest or cultivation operations to avoid damaging the sensor or sensor cable. Remove when soil is moist.

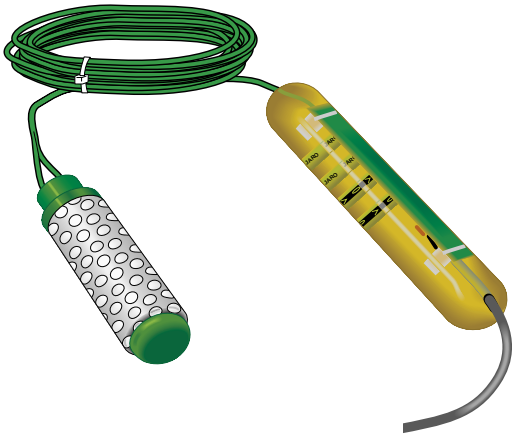

FIGURE 4.18-1. 257 Soil Moisture Sensor

4.19 ENCLOSURE HUMIDITY SENSOR

Install the PN 10162, HM2000 Humidity Sensor in the enclosure to monitor enclosure humidity. The MetData1 and ET101/106 are shipped with this sensor pre-installed.

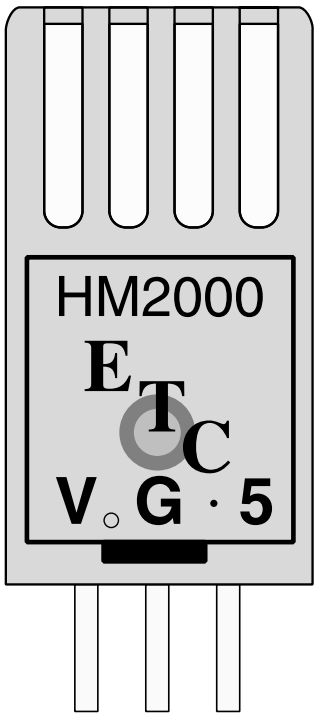

FIGURE 4.19-1. Enclosure Humidity Sensor

4.20 WIND DIRECTION SENSOR ORIENTATION

4.20.1 DETERMINING TRUE NORTH AND SENSOR ORIENTATION

Orientation of the wind direction sensor is done after the datalogger has been programmed, and the location of True North has been determined. True North is usually found by reading a magnetic compass and applying the correction for magnetic declination*; where magnetic declination is the number of degrees between True North and Magnetic North. Magnetic declination for a specific site can be obtained from a USFA map, local airport, or through a computer service offered by the USFS called GEOMAG (Section 4.20.2). A general map showing magnetic declination for the contiguous United States is shown in Figure 4.20-1.

Declination angles east of True North are considered negative, and are subtracted from 0 degrees to get True North as shown Figure 4.20-2. Declination angles west of True North are considered positive, and are added to 0 degrees to get True North as shown in Figure 4.20-3. For example, the declination for Logan, Utah is 16° East. True North is 360° - 16°, or 344° as read on a compass.

Orientation is most easily done with two people, one to aim and adjust the sensor, while the other observes the wind direction displayed by the datalogger.

1. Establish a reference point on the horizon for True North.
2. Sighting down the instrument center line, aim the nose cone, or counterweight at True North. Display the input location for wind direction using the *6 Mode of the datalogger, or, the Monitor Mode of GraphTerm with an on-line PC.
3. Loosen the band clamps or set screws that secure the base of the sensor to the mast or crossarm. While holding the vane position, slowly rotate the sensor base until the datalogger indicates 0 degrees. Tighten the band clamps or set screws loosened previously.
4. Engage the orientation ring indexing pin in the notch at the instrument base (05103 and 05305 sensors only), and tighten the band clamp on the orientation ring.

* Other methods employ observations using the North Star or the sun, and are discussed in the Quality Assurance Handbook for Air Pollution Measurement Systems, Volume IV - Meteorological Measurements[4].

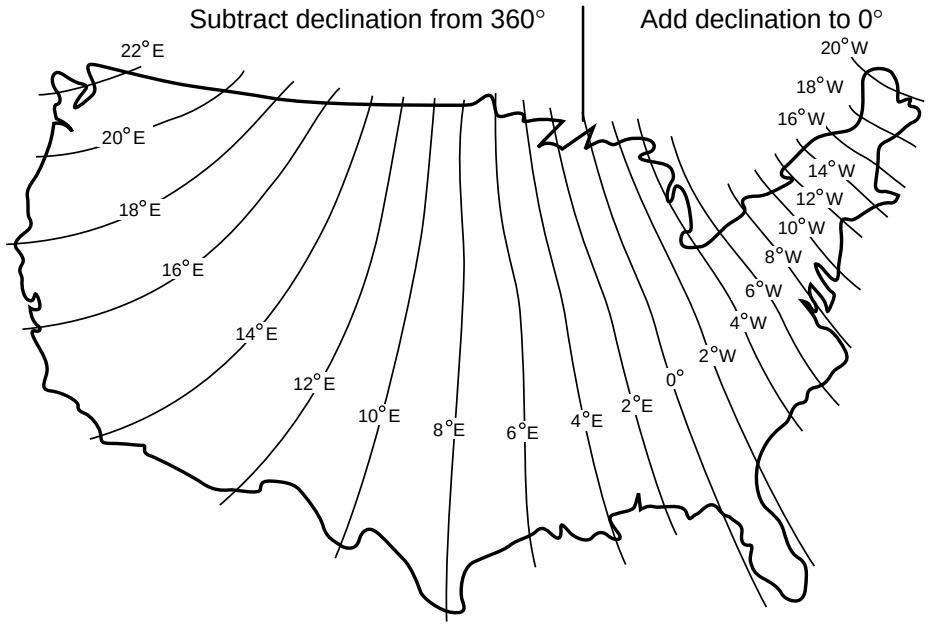

FIGURE 4.20-1. Magnetic Declination for the Contiguous United States

4.20.2 PROMPTS FROM GEOMAG

GEOMAG is accessed by calling 1-800-358-2663 with a computer and telephone modem, and communications program such as GraphTerm (PC208 Software). GEOMAG prompts the caller for site latitude, longitude, and elevation, which it uses to determine the magnetic declination and annual change. The following Menu and prompts are from GEOMAG:

MAIN MENU

Type
- Q for Quick Epicenter Determinations (QED)
- L for Earthquake Lists (EQLIST)
- M for Geomagnetic Field Values (GEOMAG)
- X to log out

Enter program option: M

Would you like information on how to run GEOMAG (Y/N)? N

Options:

1 = Field Values (D, I, H, X, Z, F)
2 = Magnetic Pole Positions
3 = Dipole Axis and Magnitude
4 = Magnetic Center [1] : 1

Display values twice	[N]: press return
Name of field model	[USCON90]: press return
Date	[current date]: press return
Latitude	: 42/2 N
Longitude	: 111/51/2 W
Elevation	: 4454
Units (m/km/ft)	: ft

Example of report generated by GEOMAG:

Model: USCON90	Latitude: 42/2 N
Date : 7/27/93	Longitude: 111/51/2 W
	Elevation: 4454.0 ft

D
<u>deg min</u>

15 59.6

Annual change:

0 -6.1

The declination in the example above is listed as 15 degrees and 59.6 minutes. Expressed in degrees, this would be 15.99 degrees. As shown in Figure 4.20-1, the declination for Utah is east, so True North for this site is 360 - 15.99, or 344 degrees. The annual change is -6.1 minutes.

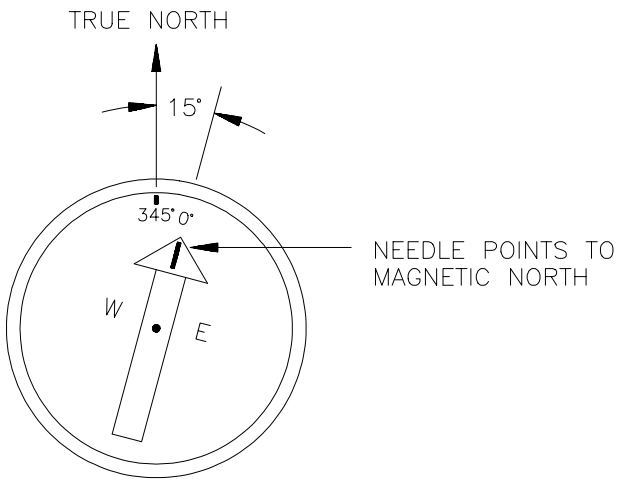

FIGURE 4.20-2. Declination Angles East of True North Are Subtracted From 0 to Get True North

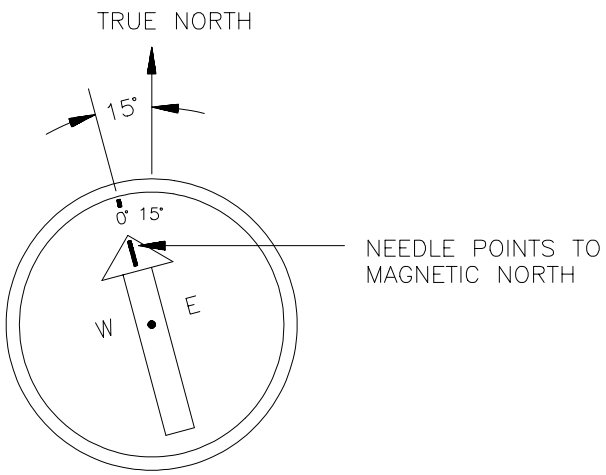

FIGURE 4.20-3. Declination Angles West of True North Are Added to 0 to Get True North

SECTION 5. METDATA1 SOFTWARE INSTALLATION

Software required for the METDATA1 consists of the datalogger program and a datalogger support software suite for Windows or MS-DOS.

5.1 DATALOGGER PROGRAM

The datalogger program operates the MetData1. It programs the MetData1 to measure sensors, process the measurements, and store data in the datalogger's memory. The datalogger program is created using Short Cut for MS-DOS. It is compatible with Windows DOS emulator. A separate manual covers the use of Short Cut in detail.

5.2 DATALOGGER SUPPORT SUITE

A datalogger support software suite, either PC208W or PC208, enables interfacing with the MetData1 through Windows or MS-DOS. Follow the installation procedure outlined in the front of the software manual. PC208(W) is used to download programs to the MetData1. It is also used to monitor data in real time and retrieve data stored in the MetData1.

5.3 QUICK START REVIEW

Follow these steps to program the MetData1 and install the datalogger support software suite.

1) Install PC208W or PC208, and Short Cut, into your Windows or DOS computer.

2) Start Short Cut by entering "MetData1" at a DOS prompt. Create the MetData1 program by following the four steps outlined. Use CR10X as the datalogger choice in Short Cuts Step 1.

3) Start PC208 by typing "PC208E" at the DOS prompt <u>OR</u> start PC208W from Windows.

4) Create a station file with PC208 (**File | New | Station**) <u>OR</u> create a station on the PC208W device map (**Setup | Add Device**).

5) Establish communications with the MetData1. With PC208W **Connect | Connect** will activate the communication and confirm communications by reporting the datalogger clock time. With PC208 **File | Open | Station** then **RealTime | Call** then **Tools | Clock Set / Check** will activate the station file and confirm communications by checking the datalogger clock.

6) Download the program created in Step 2. With PC208W **Connect | Send** will download the MetData1 program. With PC208 **Tools | Send Datalogger Prog** will download the MetData1 program.

7) After the appropriate length of time, retrieve data from the datalogger to an ASCII file. With PC208W **Connect | Collect** will retrieve data. With PC208 **DataCollection | Call Now (CurrentStn)** will retrieve data.

8) Weather reports can be generated. PAR files created by Short Cut can be used to create simple reports. With PC208W **Report | File | Open** will select a PAR file. With PC208, **File | Reports | Edit Param File** will select a PAR file.

SECTION 6. MAINTENANCE AND TROUBLESHOOTING

These guidelines apply to several different Campbell Scientific weather stations.

6.1 MAINTENANCE

Proper maintenance of weather station components is essential to obtain accurate data. Equipment must be in good operating condition, which requires a program of regular inspection and maintenance. Routine and simple maintenance can be accomplished by the person in charge of the weather station. More difficult maintenance such as sensor calibration, sensor performance testing (i.e., bearing torque), and sensor component replacement, generally requires a skilled technician, or that the instrument be sent to Campbell Scientific or the manufacturer.

A station log should be maintained for each weather station that includes serial numbers, dates that the site was visited, and maintenance that was performed.

6.1.1 INSTRUMENTATION MAINTENANCE

The instrumentation requires a minimum of routine maintenance. A few preventative maintenance steps will optimize battery life and decrease the chances of datalogger failure.

6.1.2 BATTERIES

Instruction 10 can be used to measure battery voltage. By recording battery voltage the user can determine how long a fresh set of batteries will last (see the Installation Section of the datalogger Operator's Manual for cold temperature effects on alkaline batteries). Short Cut and ETPro automatically program the weather station to measure battery voltage.

When alkaline batteries are used, the battery voltage should not be allowed to drop below 9.6 VDC before replacement. Where CR10 or 21X dataloggers are used in the instrumentation, an external battery must be used to maintain power to the datalogger when changing batteries, otherwise the clock, program, and data will be lost (refer to the Installation Section of the datalogger's Operator's Manual for details). When not in use, remove the eight cells to eliminate potential corrosion of the contact points, and store in a cool dry place.

Rechargeable power supplies should be connected to an AC transformer or unregulated solar panel at all times. The charge indicating diode should be "ON" when voltage to the charging circuitry is present. Be aware of battery voltage that consistently decreases over time, which indicates a failure in the charging circuitry.

6.1.3 DESICCANT

Enclosure humidity is monitored in the ET Enclosure and MetData1 systems by an RH chip incorporated into the connector board. Change the desiccant packs when the enclosure RH exceeds 35%. The RH chip should be changed every 3 to 5 years.

In standard weather stations, a humidity indicator card is provided with the enclosure. A small RH sensor (10162) can be purchased separately to record the RH inside the enclosure. Change the desiccant when either the card or the sensor read about 35% RH.

Desiccant may be ordered through Campbell Scientific (DSC 20/4).

Desiccant packs inside of the dataloggers do not require replacement under normal conditions.

6.1.4 SENSOR MAINTENANCE

Sensor maintenance should be performed at regular intervals, depending on the desired accuracy and the conditions of use. A suggested maintenance schedule is outlined below.

1 week

- Check the pyranometer for level and contamination. Gently clean, if needed.
- Visually inspect the wind sensors and radiation shield.

1 month

- Check the rain gage funnel for debris and level.
- Do a visual/audio inspection of the anemometer at low wind speeds.
- Check the filter of the temperature/humidity sensor for contamination.

General Maintenance

- An occasional cleaning of the glass on the solar panel will improve its efficiency.
- Check sensor leads and cables for cracking, deterioration, proper routing, and strain relief.
- Check the tripod or tower for structural damage, proper alignment, and for level/plumb.

6 months

- Clean the temperature/humidity sensor.
- Clean the Gill Radiation Shield.

1 year

- Replace anemometer bearings.
- Calibrate the rain gage.
- Calibrate the HMP45C/HMP35C probe.
- Check calibration of CS500 RH Probe; replace RH chip if necessary.
- Check internal RH chip (MetData1 and ET101/106 only). Replace if >5% off.

2 years

- Calibrate the solar radiation sensors (some users suggest yearly).
- Calibrate the temperature sensor.
- Replace the wind vane potentiometer and bearings.

4 - 5 years

- Replace sensor cables as required.

6.2 TROUBLESHOOTING

6.2.1 NO RESPONSE USING THE KEYPAD

Check keypad response after each of the following steps.

A. Make sure the battery has been installed, and the power switch, if any, is "ON" (Section 7).

B. Use a voltmeter to measure the voltage on the 12 V and G terminals; the voltage must be between 9.6 and 16 VDC.

C. Disconnect any sensor or peripheral wires connected to the 5 V and 12 V terminals.

D. Disconnect any communications or storage peripherals from the datalogger.

E. Reset the datalogger by turning the power switch to "OFF", then to "ON" or disconnecting and reconnecting the battery.

F. If still no response, call Campbell Scientific.

6.2.2 NO RESPONSE FROM DATALOGGER THROUGH SC32A OR MODEM PERIPHERAL

At the datalogger:

A. Make sure the battery has been installed, and the power switch, if any, is "ON" (Section 7).

B. Use a voltmeter to measure the voltage on the 12 V and G terminals; the voltage must be between 9.6 and 16 V DC.

C. Make sure the datalogger is connected to the modem, and the modem is properly configured and cabled (Section 9).

At the computer:

D. Make sure the Station File is configured correctly (PC208 Manual).

E. Check the cable(s) between the serial port and the modem. If cables have not been purchased through Campbell Scientific, check for the following configuration using an ohm meter:

25-pin serial port:

computer end	modem end
2	2
3	3
7	7
20	20

9-pin serial port:

computer end	modem end
2	3
3	2
4	20
5	7

F. Make sure the modem is properly configured and cabled (Section 9).

G. If still no response, call Campbell Scientific.

6.2.3 -99999 DISPLAYED IN AN INPUT LOCATION

A. Make sure the battery voltage is between 9.6 and 16 VDC.

B. With the MetData1 or ET106, verify that the sensor is connected to the proper bulkhead connector. With custom weather stations, verify the sensor is wired to the analog channel specified in the measurement instruction or Short Cut .FSL file (single-ended channels are not labeled on the older silver-colored wiring panels and are numbered sequentially starting at 1H; i.e. 1L is single-ended channel 2).

C. Make sure the Range parameter in the measurement instruction covers the full scale voltage output by the sensor.

6.2.4 UNREASONABLE RESULTS DISPLAYED IN AN INPUT LOCATION

A. Inspect the sensor for damage and/or contamination.

B. Make sure the sensor is properly wired to the datalogger.

C. Check the multiplier and offset parameters in the measurement instruction.

6.2.5 6999 OR 99999 STORED IN FINAL STORAGE (OR STORAGE MODULE)

A. Final Storage format limitations exceeded (any number larger than 6999 in low resolution, or 99999 in high resolution format is stored as the maximum number). Change the datalogger program.