MODEL 223 DELMHORST
CYLINDRICAL SOIL MOISTURE BLOCK

REVISION: 8/99

COPYRIGHT (c) 1991-1999 CAMPBELL SCIENTIFIC, INC.

Warranty and Assistance

The **MODEL 223 DELMHORST CYLINDRICAL SOIL MOISTURE BLOCK** is warranted by CAMPBELL SCIENTIFIC, INC. to be free from defects in materials and workmanship under normal use and service for twelve (12) months from date of shipment unless specified otherwise. Batteries have no warranty. CAMPBELL SCIENTIFIC, INC.'s obligation under this warranty is limited to repairing or replacing (at CAMPBELL SCIENTIFIC, INC.'s option) defective products. The customer shall assume all costs of removing, reinstalling, and shipping defective products to CAMPBELL SCIENTIFIC, INC. CAMPBELL SCIENTIFIC, INC. will return such products by surface carrier prepaid. This warranty shall not apply to any CAMPBELL SCIENTIFIC, INC. products which have been subjected to modification, misuse, neglect, accidents of nature, or shipping damage. This warranty is in lieu of all other warranties, expressed or implied, including warranties of merchantability or fitness for a particular purpose. CAMPBELL SCIENTIFIC, INC. is not liable for special, indirect, incidental, or consequential damages.

To comply with FCC Rules and Regulations, all repairs on the COM300 must be performed by Campbell Scientific, Inc. or an authorized agent of Campbell Scientific, Inc. Products may not be returned without prior authorization. To obtain a Returned Materials Authorization (RMA), contact CAMPBELL SCIENTIFIC, INC., phone (435) 753-2342. After an applications engineer determines the nature of the problem, an RMA number will be issued. Please write this number clearly on the outside of the shipping container. CAMPBELL SCIENTIFIC's shipping address is:

CAMPBELL SCIENTIFIC, INC.
RMA#_____
815 West 1800 North
Logan, Utah 84321-1784

CAMPBELL SCIENTIFIC, INC. does not accept collect calls.

Non-warranty products returned for repair should be accompanied by a purchase order to cover the repair.

CAMPBELL SCIENTIFIC, INC.

815 W. 1800 N.
Logan, UT 84321-1784
USA
Phone (435) 753-2342
FAX (435) 750-9540
www.campbellsci.com

Campbell Scientific Canada Corp.
11564 -149th Street
Edmonton, Alberta T5M 1W7
CANADA
Phone (780) 454-2505
FAX (780) 454-2655

Campbell Scientific Ltd.
Campbell Park
80 Hathern Road
Shepshed, Loughborough
LE12 9GX, U.K.
Phone +44 (0) 1509 601141
FAX +44 (0) 1509 601091

Model 223 Delmhorst Cylindrical Soil Moisture Block

1. General Description

The 223 gypsum soil moisture block is configured for use with the AM32 and AM416 Multiplexer. The -L option on the Model 223-L indicates that the cable length is user specified. This manual refers to the sensor as the 223 and applies to the 223-L as well. The Delmhorst cylindrical block is composed of gypsum cast around two concentric electrodes which confine current flow to the interior of the block, greatly reducing potential ground loops. Gypsum located between the outer electrode and the soil creates a buffer against salts which may affect the electrical conductivity. Individual calibrations are required for accurate readings of soil water potential.

The multiplexer that the 223 is connected to leaves the circuit open when no measurements are being made. This blocks direct current flow from the 223 to datalogger ground and prevents electrolysis from prematurely destroying the sensor.

The 223 should not be connected directly to the datalogger. The 227 Delmhorst soil moisture block is available for direct connection and has capacitors in the cable that block direct current flow.

Gypsum blocks typically last for one to two years. Saline or acidic soils tend to degrade the block, reducing longevity. To maximize longevity, gypsum blocks not used during the winter should be removed from the field. Shallow blocks may become frozen and crack, while blocks located below the frost line may not maintain full contact with the soil. Regardless of depth, blocks left in the field over winter are subject to the corrosive chemistry of the soil.

2. Specifications

Approximate Cylinder Dimensions	
Diameter	2.25 cm (0.88”)
Length	2.86 cm (1.25”)
Material	Gypsum
Electrode Configuration	Concentric cylinders
Center electrode	Excitation
Outer electrode	Ground

Calibration: Measurements are affected by soil salinity, including fertilizer salts. Individual calibrations are required for accurate measurement of soil water potential. The soil water potential versus resistance values in Table 2 are “typical” values supplied by Delmhorst Corporation. Neither Delmhorst or Campbell Scientific make any claim as to the accuracy of these values. The calibration equations in Section 4.5

were fit to the values in Table 2 to allow output of an estimated water potential.

3. Installation

NOTE The black outer jacket of the cable is Santoprene® rubber. This compound was chosen for its resistance to temperature extremes, moisture, and UV degradation. However, this jacket will support combustion in air. It is rated as slow burning when tested according to U.L. 94 H.B. and will pass FMVSS302. Local fire codes may preclude its use inside buildings.

Delmhorst recommends the blocks go through two wetting-drying cycles before installation to improve block uniformity. For each cycle, the blocks should be soaked in water for one hour and allowed to dry.

Soil moisture blocks measure only the moisture they "see", therefore placement is important. Avoid depressions where the water will puddle after a rain. Likewise, don't place the blocks in high spots or near changes in slope unless you are trying to measure the variability created by such differences.

Prior to installation, soak the blocks for two to three minutes. Mix a slurry of soil and water to a creamy consistency and place one or two tablespoons into the installation hole. Insert the block, forcing the slurry to envelope the block. This will insure uniform soil contact. Back fill the hole, tamping lightly at frequent intervals.

4. Wiring

The 223 is shown in Figure 3. The leads from the block electrodes are connected directly to the H and L inputs on the AM32 or AM416. The lead from the center electrode (white stripe or solid white) connects to H and the lead from the outer electrode (black) to L. A 1K resistor at the datalogger is used to complete the half bridge measurement.

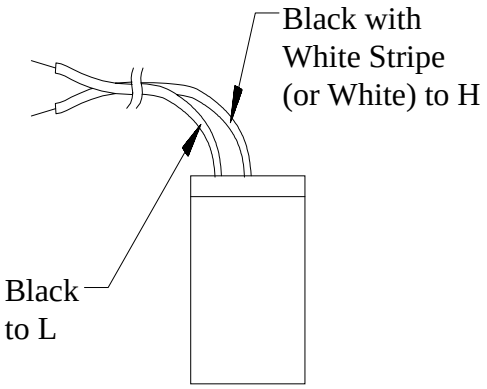

FIGURE 1

TABLE 1. 223 Wiring		
Color	**Function**	**AM416 or AM32**
Black w/ White Stripe or White	Excitation	H
Black	Signal Ground	L

5. Programming

When a multiplexer is used, the measurements are placed within a loop. Each pass through the loop the multiplexer is clocked to the next channel and the sensors connected to that channel are measured. With the example AM416 program, two 223 sensors are measured each pass through the loop.

5.1 Measurement - Instruction 5

Instruction 5 (P5, AC Half Bridge) is used to excite and measure the 227. Recommended excitation voltages and input ranges are given in Table 2.

5.2 Calculate Sensor Resistance - Instruction 59

Instruction 59 (Bridge Transform) is used to output sensor resistance (R_S). This Instruction takes the AC Half Bridge output (V_S/V_X) and computes sensor resistance as follows:

$$R_S = R_1(X/(1-X))$$

$$\text{where, } X = V_S/V_X.$$

The bridge transform multiplier would normally be 1000, representing the fixed resistor (R_1) shown in Figure 1. A bridge multiplier of 1000 produces values of R_S larger than 6999 Ohms causing the datalogger to overrange when using low resolution. To avoid overranging, a bridge multiplier of 1 should be used to output sensor resistance (R_S) in terms of kohms.

TABLE 2. Excitation and Voltage Ranges

Datalogger	MV Excitation	Input Range	Full Scale Range
21X	500	14	±500 mV
CR7	500	16	±500 mV
CR10(X)	250	14	±250 mV
CR23X	200	13	±200 mV

NOTE: Do not use a slow integration time as sensor polarization errors will occur.

The output from Instruction 5 is the ratio of signal voltage to excitation voltage:

$V_s/V_x = R_s/(R_s+R_1)$

where, V_s = Signal Voltage

V_x = Excitation Voltage

R_s = Sensor Resistance

and, R_1 = Fixed Bridge Resistor.

Table 3 lists typical block resistance at different soil water potentials and the resulting V_S/V_X. Figure 2 is a plot of V_S/V_X versus bars. The non-linear relationship of V_S/V_X to bars precludes computing bars from an average of V_S/V_X.

TABLE 3. Typical Soil Water Potential, R_S and V_S/V_X

BARS	R_S(kohms)	V_S/V_X
0.1	0.060	0.0566
0.2	0.130	0.1150
0.3	0.260	0.2063
0.4	0.370	0.2701
0.5	0.540	0.3506
0.6	0.750	0.4286
0.7	0.860	0.4624
0.8	1.100	0.5238
0.9	1.400	0.5833
1.0	1.700	0.6296
1.5	3.400	0.7727
1.8	4.000	0.8000
2.0	5.000	0.8333
3.0	7.200	0.8780
6.0	12.500	0.9259
10.0	17.000	0.9444
11.0	22.200	0.9569
12.0	22.400	0.9573
13.0	30.000	0.9677
14.0	32.500	0.9701
15.0	35.000	0.9722

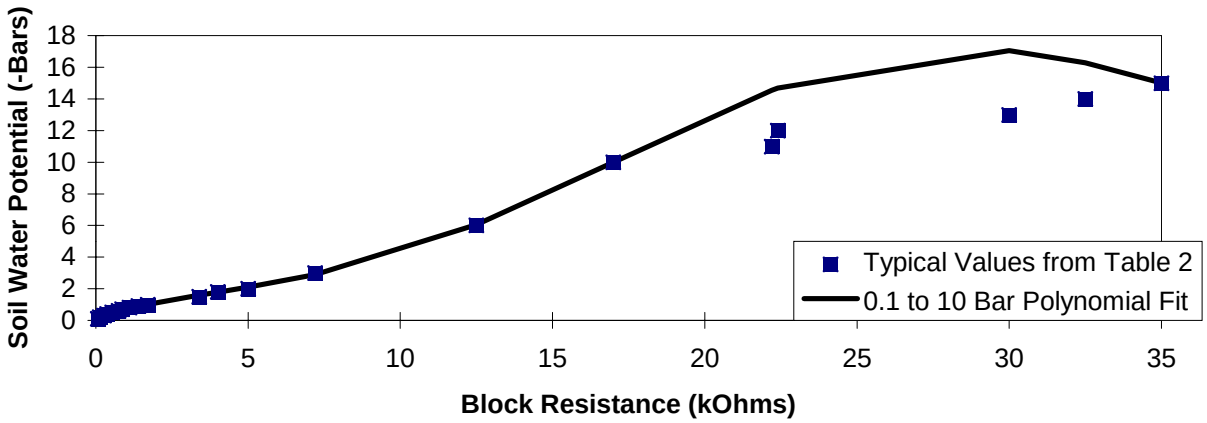

FIGURE 2. Polynomial Fit to Typical Block Resistance vs. Water Potential

TABLE 4. Polynomial Coefficients for Converting Sensor Resistance to Bars

$$BARS = C_0 + C_1(R_s) + C_2(R_s)^2 + C_3(R_s)^3 + C_4(R_s)^4 + C_5(R_s)^5$$

(BARS)	MULT. (R_1)	C_0	C_1	C_2	C_3	C_4	C_5
0.1-10	0.1	.15836	6.1445	-8.4189	9.2493	-3.1685	.33392

5.3 Calculate Soil Water Potential - Instruction 55

The datalogger program can be written to store block resistance or can calculate water potential from a block calibration.

For the typical resistance values listed in Table 2, soil water potential (bars) is calculated from sensor resistance (R_S) using the 5th order Polynomial Instruction. The non linear relationship of R_S to bars rules out averaging R_S directly.

A polynomial to calculate soil water potential was fit to the 0.1 to 10 bar range using a least squares fit. The coefficients used for the 10 bar range require R_S to be scaled down by a factor of 0.1. This multiplier can be entered in the Bridge Transform Instruction or in Processing Instruction 37.

Table 4 lists the coefficients for the 0.1 to 10 bar polynomial. Table 5 shows errors between from the least-squares polynomial approximation and the typical water potential values.

NOTE Our manuals used to show a separate polynomial for the 0.1 to 2 bar range that had slightly smaller deviations from the typical values over the narrower range. However, the variability between blocks is much greater than the improved fit and does not warrant the more complicated program.

TABLE 5. Polynomial Error - 10 Bar Range

BARS	V_S/V_X	R_S	BARS COMPUTED	ERROR
0.1	0.0566	0.006	0.1949	0.0949
0.2	0.115	0.013	0.2368	0.0368
0.3	0.2063	0.026	0.3126	0.0126
0.4	0.2701	0.037	0.3746	-0.0254
0.5	0.3506	0.054	0.4670	-0.0330
0.6	0.4286	0.075	0.5756	-0.0244
0.7	0.4624	0.086	0.6302	-0.0698
0.8	0.5238	0.11	0.7442	-0.0558
0.9	0.5833	0.14	0.8778	-0.0222
1.0	0.6296	0.17	1.0025	0.0025
1.5	0.7727	0.34	1.5970	0.0970
1.8	0.8000	0.40	1.7834	-0.0166
2	0.8333	0.50	2.0945	0.0945
3	0.8780	0.72	2.8834	-0.1166
6	0.9259	1.25	6.0329	0.0329
10	0.9444	1.70	9.9928	-0.0072

NOTE: ERROR (BARS) = TABLE 3 VALUES - COMPUTED

5.4 Example CR10(X) Program for AM416

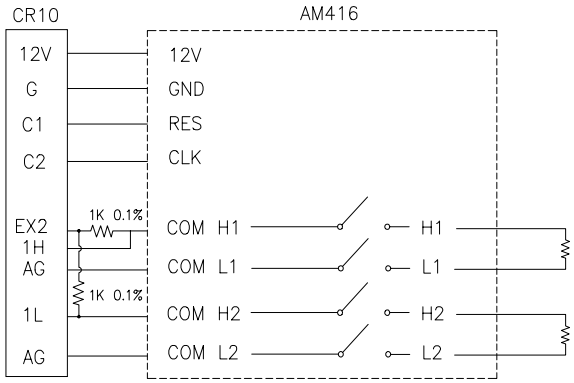

FIGURE 3. Wiring for CR10(X) Example

```
*Table 1 Program
  01:          60.0000   Execution Interval (seconds)

01:  Do (P86)                                   ;Enable AM416
  1:           41        Set Port 1 High

02:  Beginning of Loop (P87)                    ;Start of measurement loop
  1:            0        Delay
  2:           16        Loop Count

03:  Do (P86)                                   ;Clock Multiplexer to next channel
  1:           72        Pulse Port 2

04:  Step Loop Index (P90)                      ;Step index by 2 each pass through loop
  1:            2        Step

05:  AC Half Bridge (P5)                        ;Measure the 2 connected 223 blocks
  1:            2        Reps
  2:           14        250 mV Fast Range      ;See Table 2 for other dataloggers
  3:            1        SE Channel
  4:            2        Excite all reps w/Exchan 2
  5:          250        mV Excitation          ;See Table 2 for other dataloggers
  6:           1--       Loc [ BlockR_1  ]      ;-- >>> advance location by index
  7:           1.0       Mult
  8:           0.0       Offset

06:  BR Transform Rf[X/(1-X)] (P59)             ;Calculate resistance from Vs/Vx
  1:            2        Reps
  2:           1--       Loc [ BlockR_1  ]
  3:            1        Multiplier (Rf)

07:  End (P95)

08:  Do (P86)                                   ;Turn off AM416
  1:           51        Set Port 1 Low

;The following loop checks each block resistance and calculates
;water potential if BlockR < 17 kohms. Because 2 blocks are measured
;with each pass through the previous measurement loop, it is simpler
;to use a separate loop for the calculations.
;Leave out following loop if only recording block resistance.

09:  Beginning of Loop (P87)                    ;Loop to calculate water potential
  1:            0        Delay
  2:           32        Loop Count

10:  If (X<=>F) (P89)                           ;If Rs < 17, apply polynomial
  1:           1--       X Loc [ BlockR_1  ]
  2:            4        <
  3:           17        F
  4:           30        Then Do

11:  Z=X*F (P37)                                ;Scale Rs for polynomial
  1:           1--       X Loc [ BlockR_1  ]
  2:             .1      F
  3:          33--       Z Loc [ WatPot_1  ]
```

```
12:  Polynomial (P55)                          ;Convert Rs to bars with 10 bar polynomial
  1:            1          Reps
  2:           33--        X Loc [ WatPot_1  ]
  3:           33--        F(X) Loc [ WatPot_1  ]
  4:             .15836    C0
  5:            6.1445     C1
  6:           -8.4198     C2
  7:            9.2493     C3
  8:           -3.1685     C4
  9:             .33392    C5

13:  Else (P94)                                ;If Rs > 17 load over range value for potential

14:  Z=F (P30)
  1:       -99999          F
  2:            0          Exponent of 10
  3:           33          Z Loc [ WatPot_1  ]

15:  End (P95)                                 ;End then do

16:  End (P95)                                 ;End loop

17:  If time is (P92)                          ;Output Resistance and Water Potential
                                               each Hour
  1:            0          Minutes (Seconds --) into a
  2:           60          Interval (same units as above)
  3:           10          Set Output Flag High (Flag 0)

18:  Set Active Storage Area (P80)             ;Fix the Array ID to 60
  1:            1          Final Storage Area 1
  2:           60          Array ID

19:  Real Time (P77)                           ;Output Day and Hour/Minute
  1:          220          Day,Hour/Minute (midnight = 2400)

20:  Sample (P70)                              ;Output resistances and Water Potentials
  1:           64          Reps
  2:            1          Loc [ BlockR_1  ]
```

5.5 Example 21X Program

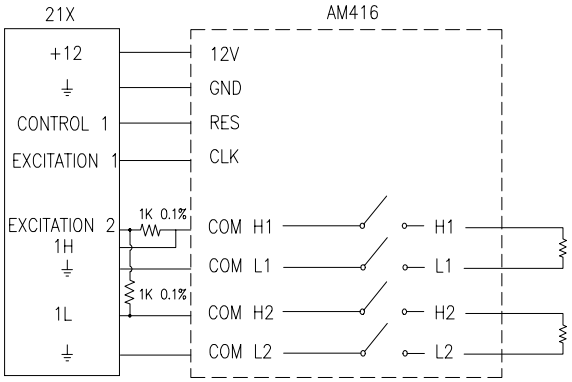

FIGURE 4. Wiring for Example 21X Program

```
*Table 1 Program
  01:          10          Execution Interval (seconds)

01:  Set Port (P20)                          ;Enable AM416
  1:            1          Set High
  2:            1          Port Number

02:  Beginning of Loop (P87)                 ;Start of measurement loop
  1:            0          Delay
  2:           16          Loop Count

03:  Excitation with Delay (P22)             ;Clock Multiplexer to next channel
  1:            1          Ex Channel
  2:            1          Delay w/Ex (units = 0.01 sec)
  3:            1          Delay After Ex (units = 0.01 sec)
  4:         5000          mV Excitation

04:  Step Loop Index (P90)                   ;Step index by 2 each pass through loop
  1:            2          Step

05:  AC Half Bridge (P5)                     ;Measure the 2 connected 223 blocks
  1:            2          Reps
  2:           14          500 mV Fast Range      ;See Table 2 for other dataloggers
  3:            1          SE Channel
  4:            2          Excite all reps w/Exchan 2
  5:          500          mV Excitation          ;See Table 2 for other dataloggers
  6:            1--        Loc [ BlockR_1  ]      ; -- >>> advance location by index
  7:            1.0        Mult
  8:            0.0        Offset

06:  BR Transform Rf[X/(1-X)] (P59)          ;Calculate resistance from Vs/Vx
  1:            2          Reps
  2:            1--        Loc [ BlockR_1  ]
  3:            1.0        Mult (Rf)

07:  End (P95)
```

```
08:    Set Port (P20)                                  ;Turn off AM416
  1:            0          Set Low
  2:            1          Port Number

;The following loop checks each block resistance and calculates
;water potential if BlockR < 17 kohms. Because 2 blocks are measured
;with each pass through the previous measurement loop, it is simpler
;to use a separate loop for the calculations.
;Leave out following loop if only recording block resistance.

09:  Beginning of Loop (P87)                           ;Loop to calculate water potential
  1:            0          Delay
  2:           32          Loop Count

10:  If (X<=>F) (P89)                                  ;If Rs < 17, apply polynomial
  1:            1--        X Loc [ BlockR_1  ]
  2:            4          <
  3:           17          F
  4:           30          Then Do

11:  Z=X*F (P37)                                       ;Scale Rs for polynomial
  1:            1--        X Loc [ BlockR_1  ]
  2:           .1          F
  3:          33--         Z Loc [ WatPo_1   ]

12:  Polynomial (P55)                                  ;Convert Rs to bars with 10 bar polynomial
  1:            1          Reps
  2:          33--         X Loc [ WatPo_1   ]
  3:          33--         F(X) Loc [ WatPo_1   ]
  4:          .15836       C0
  5:          6.1445       C1
  6:         -8.4198       C2
  7:          9.2493       C3
  8:         -3.1685       C4
  9:          .33392       C5

13:  Else (P94)                                        ;If Rs > 17 load overrange value for potential

14:  Z=F (P30)
  1:       -99999          F
  2:          33--         Z Loc [ WatPo_1   ]

15:  End (P95)                                         ;End then do

16:  End (P95)                                         ;End loop

17:  If time is (P92)                                  ;Output Resistance and Water Potential
                                                       each Hour
  1:            0          Minutes (Seconds --) into a
  2:           60          Interval (same units as above)
  3:           10          Set Output Flag High (Flag 0)

18:  Set Active Storage Area (P80)                     ;Fix the Array ID to 60
  1:            1          Final Storage Area 1
  2:           60          Array ID
```

```
19:  Real Time (P77)                                  ;Output Day and Hour/Minute
  1:            220          Day,Hour/Minute (midnight = 2400)

20:  Sample (P70)                                     ;Output resistances and Water Potentials
  1:             64          Reps                     ;32 reps if not outputting water potential
  2:              1          Loc [ BlockR_1  ]
```