GERBER

www.gerberonline.com

# Maxwell® 1.6 GPF Elongated Toilet

10″ Rough-in

## Features:

### ☐ MX-21-410

- Vitreous china
- Combination bowl and tank
- 3″ Flush valve
- 10″ Rough-in
- Elongated bowl
- Dual-fed siphon jet action bowl (no splashing)
- 2″ Fully Glazed trapway for effective waste removal
- Color matched metal tank lever
- 6 point tank to bowl connection for tank stability
- Sanitary bead for easy cleaning
- Color matched Bolt caps included
- Toilet seat not included

## Technical Information:

### Included Components:

| | |
|---|---|
| ☐ Combination | MX-21-410 |
| ☐ Bowl | 21-962 |
| ☐ Tank | MX-28-995 |

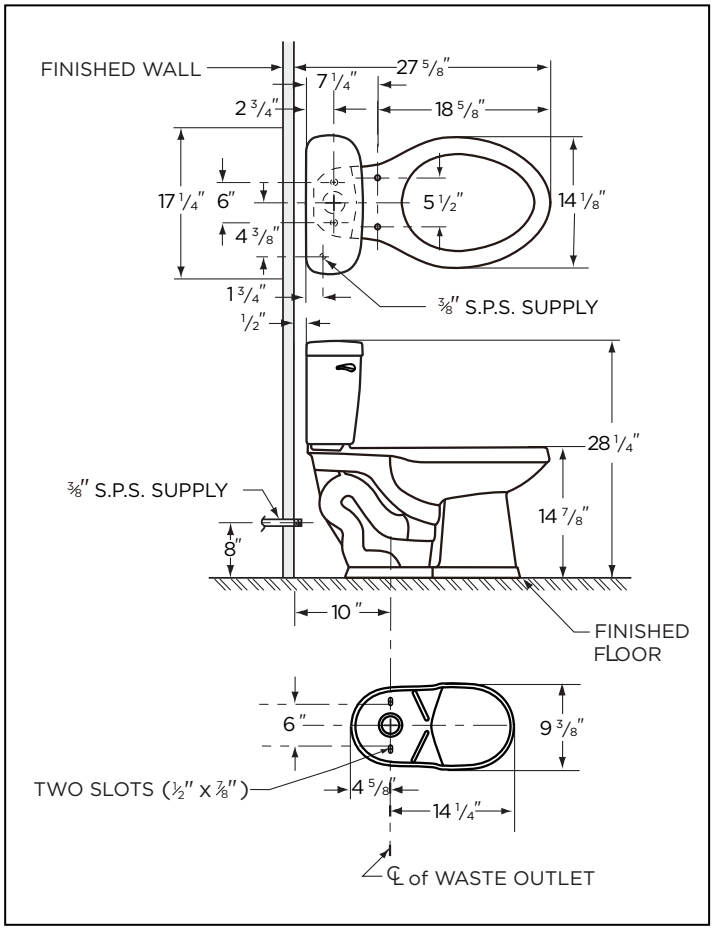


## Fixtures:

| | |
|---|---|
| Configuration | Two-piece, elongated |
| Water per Flush | 1.6 gpf (6 lpf) |
| Rough-In | 10″ |
| Height | 28 1/4″ |
| Width | 17 1/4″ |
| Depth | 27 1/8″ |
| Trapway | 2″ |
| Large Water Surface | 10 7/8″ x 7 1/2″ |
| Shipping Weight | 73 lbs |

## Accessories:

| | |
|---|---|
| Soft Close Toilet Seat | 99-213 |

## Colors/Finishes:

- White
- Other: Refer to Price Book for additional colors/finishes

## Warranty:

- Limited lifetime warranty

NOTES: All dimensions are in inches. Illustrations may not be drawn to scale.

IMPORTANT:
Dimensions of fixtures are nominal and may vary within the range of tolerances established by ASME standard A 112.19.2
THIS FIXTURE QUALIFIES ACCORDING TO ASME TEST PROCEDURES AS A HIGH EFFICIENCY WATER CLOSET WITH AN AVERAGE CONSUMPTION OF 1.28 gpf (4.8 Lpf) OR LESS.